DIST.	COUNTY	ROUTE	KILOMETER POST TOTAL PROJECT	SHEET NO.	TOTAL SHEETS

Caltrans Metric

REGISTERED ENGINEER - CIVIL

PLANS APPROVAL DATE

REGISTERED PROFESSIONAL ENGINEER No. Exp. CIVIL STATE OF CALIFORNIA

The State of California or its officers or agents shall not be responsible for the accuracy or completeness of electronic copies of this plan sheet.

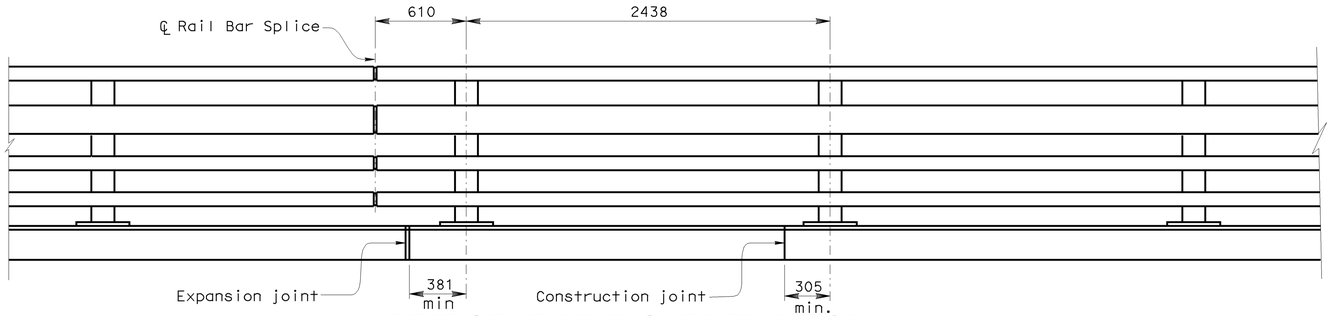

BRIDGE RAILING ELEVATION

1:20

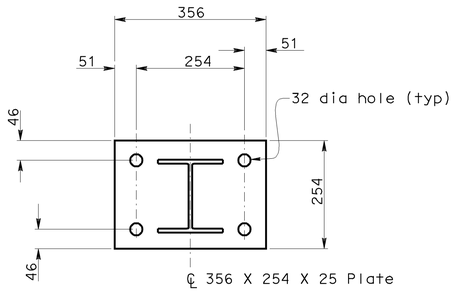

POST & BASE PLATE PLAN

1:7

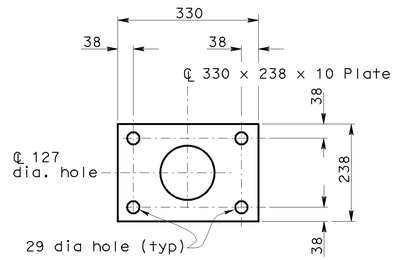

SPACER PLATE PLAN

1:7

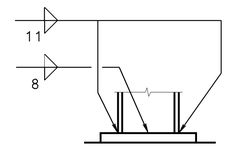

BASE WELD DETAIL

NO SCALE

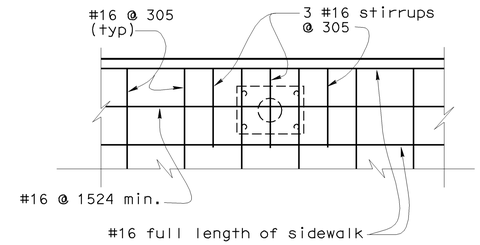

SIDEWALK REINFORCING PLAN

NO SCALE

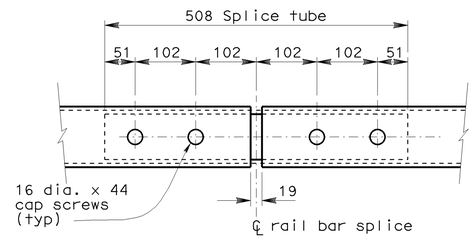

BOTTOM VIEW RAIL BAR SPLICE DETAIL

1:5

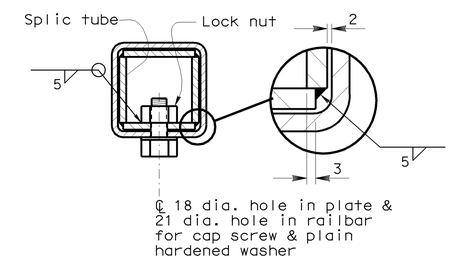

RAIL BAR SPLICE SECTION

NO SCALE

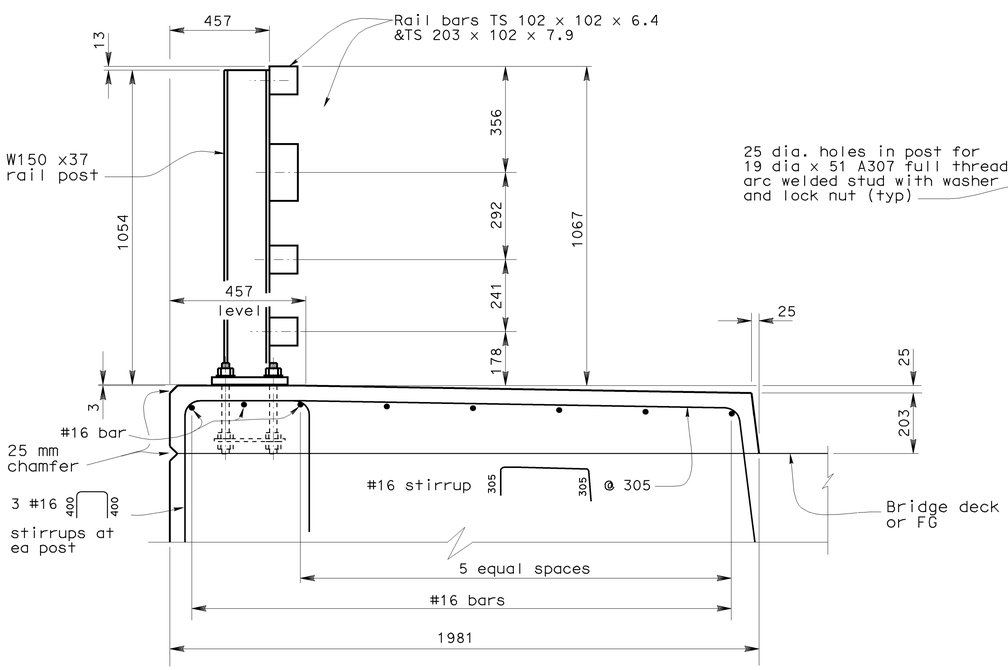

TYPICAL SECTION

1:10

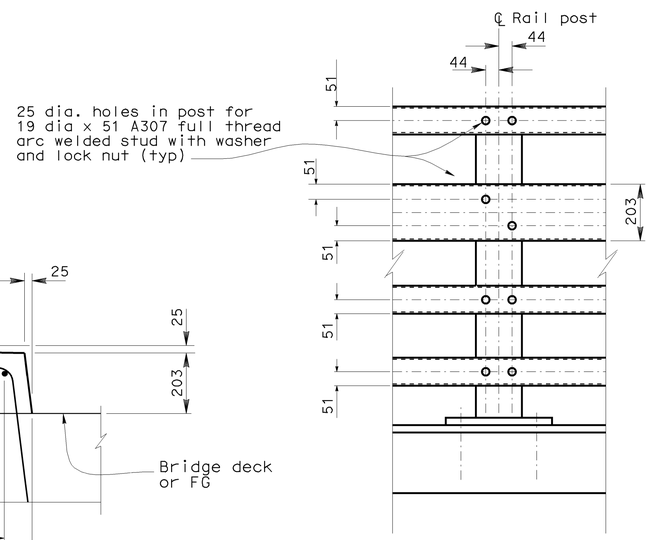

ELEVATION

1:10

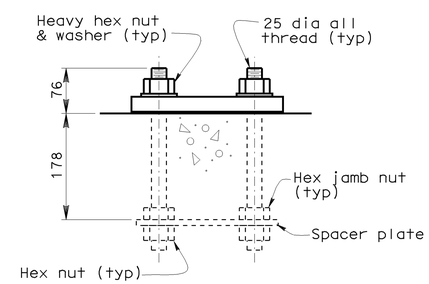

RAIL POST ANCHORAGE

1:5

NOTES:

1. All exposed cuts or sheared enges shall be rounded and free of burs.
2. Rail posts shall be set normal to grade.
3. Lengths of rail bar shall be attatched to a minimun of two (2) rail posts
4. All parts shall be galvanized after fabrication in accordance with ASTM A123. Except that hardware shall meet the requirements of ASTM A153.
5. Rail post anchoring nuts shall be tightened to a snug fit and given additional 1/8 turn.
6. Holes in posts for rail bar attachment may be field drilled. Holes shall be cooled with an approved zinc-rich point prior to erection.

NO SCALE

ALL DIMENSIONS ARE IN MILLIMETERS UNLESS OTHERWISE SHOWN

STANDARD DRAWING

RELEASE DATE 8/26/03	DESIGN	BY NAHED ABDIN	CHECKED FELIX ALTAMIRANO	RELEASED BY
	DETAILS	BY P C WELLS	CHECKED FELIX ALTAMIRANO	
FILE NO. xs16-220	SUBMITTED	BY NAHED ABDIN	DRAWING DATE 3/02	OFFICE CHIEF

STATE OF CALIFORNIA DEPARTMENT OF TRANSPORTATION

DIVISION OF ENGINEERING SERVICES

BRIDGE NO.

KILOMETER POST

RAILING - STEEL TYPE NETC RAIL WITH SIDEWALK

DS OSD 2147A (METRIC) (REV. 2/25/97)

ORIGINAL SCALE IN MILLIMETERS FOR REDUCED PLANS 0 10 20 30 40 50 60 70 80 90 100

CU EA

DISREGARD PRINTS BEARING EARLIER REVISION DATES

REVISION DATES (PRELIMINARY STAGE ONLY) SHEET OF

USERNAME => jsanchez

xs16-220.dgn

DATE PLOTTED => 16-JAN-2004 TIME PLOTTED => 15:14