DIST.	COUNTY	ROUTE	KILOMETER POST TOTAL PROJECT	SHEET NO.	TOTAL SHEETS

REGISTERED ENGINEER - CIVIL

PLANS APPROVAL DATE

REGISTERED PROFESSIONAL ENGINEER No. Exp. CIVIL STATE OF CALIFORNIA

The State of California or its officers or agents shall not be responsible for the accuracy or completeness of electronic copies of this plan sheet.

Caltrans Metric

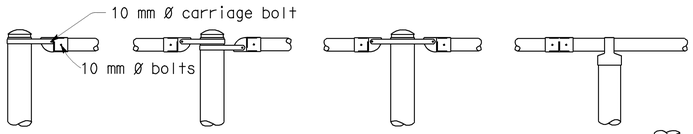

ALTERNATIVE DETAILS

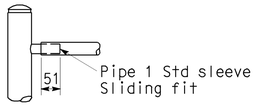

TYPICAL DETAILS

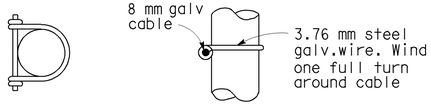

PLAN ELEVATION

DETAIL H

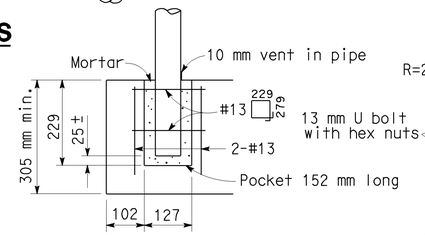

ALTERNATIVE ANCHORAGE DETAIL

May be used when thickness of concrete is 305 mm or more

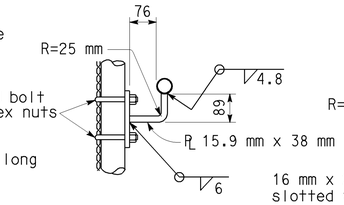

SIDE VIEW

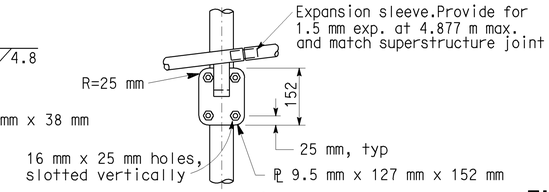

ELEVATION

PIPE HANDRAILING BRACKET

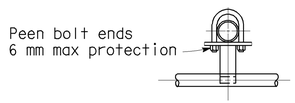

PLAN

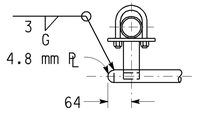

PLAN

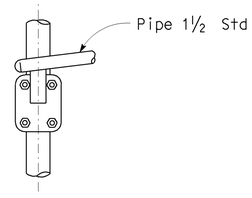

ELEVATION

PIPE HANDRAILING AT END

NOTES:

1. Railing assembly except chain link fabric to be galvanized after fabrication.
2. Railing shall conform to horizontal and vertical alignment. Posts shall be vertical. Horizontal pipes shall be bent if radius is 45.72 m or less-may be on 2.438 m chords if radius is over 45.72 m.
3. Peen all 10 mm Ø bolts.
4. When railing is on slope, fabric shall be placed parallel to slope.
5. Alternative details may be submitted by Contractor for Engineer's approval.
6. Additional pipe 1¼ std required on radius less than 45.72 m.

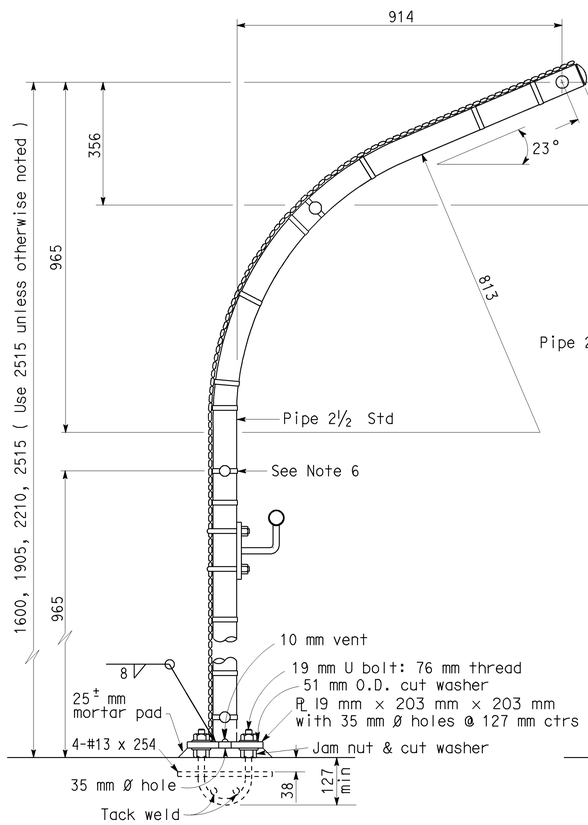

TYPICAL POST DETAIL

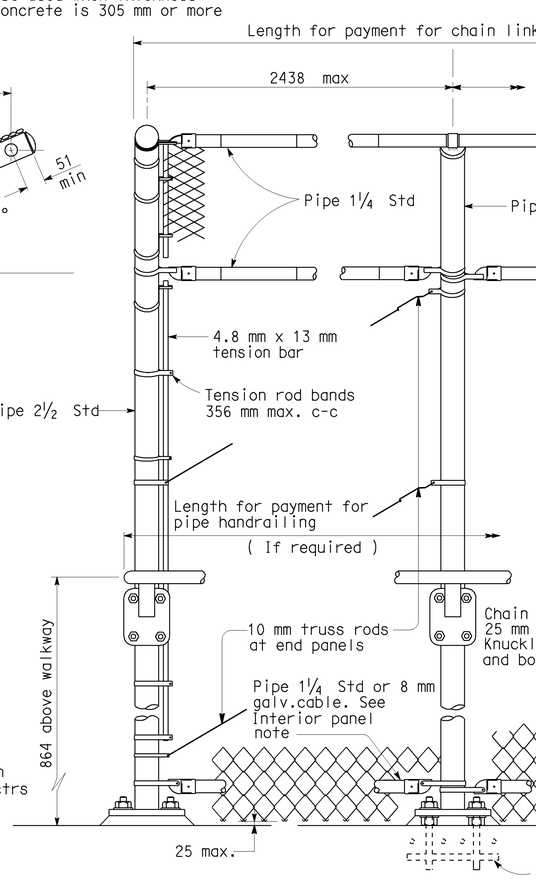

END POST INTERMEDIATE POST

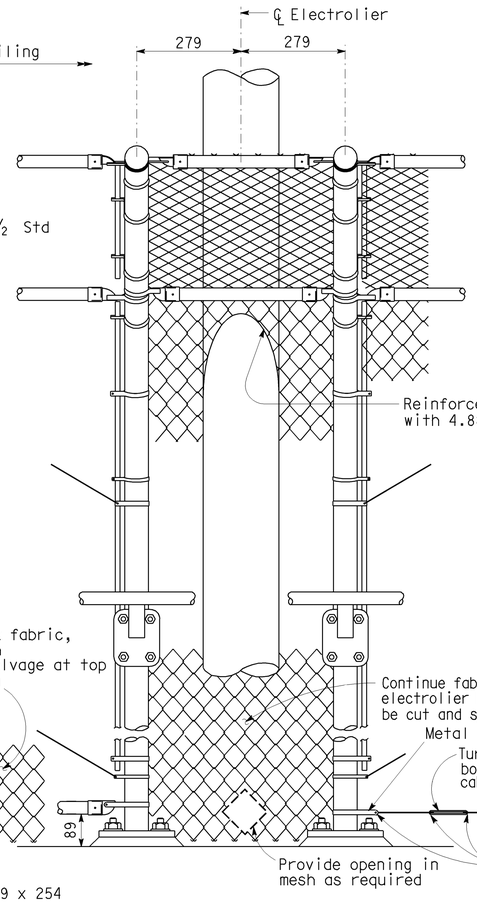

AT ELECTROLIER

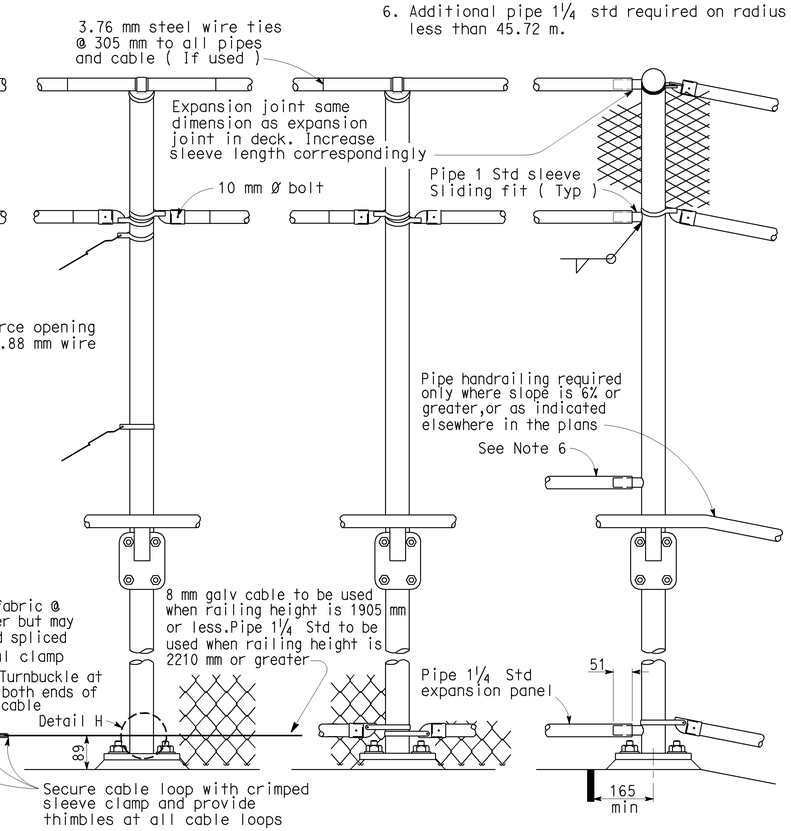

TYPICAL INTERIOR PANEL AT EXPANSION JOINT

ELEVATION

NO SCALE

ALL DIMENSIONS ARE IN MILLIMETERS UNLESS OTHERWISE SHOWN

STANDARD DRAWING					
RELEASE DATE 6/9/98	DESIGN	BY R.W. BISHOP	CHECKED J. HAMAGUCHI	RELEASED BY	
	DETAILS	BY R. YEE	CHECKED J. HAMAGUCHI		
FILE NO. xs16-310	SUBMITTED	BY J. HAMAGUCHI	DRAWING DATE 4/91	OFFICE CHIEF	

STATE OF CALIFORNIA DEPARTMENT OF TRANSPORTATION

DIVISION OF ENGINEERING SERVICES

BRIDGE NO.

KILOMETER POST

CHAIN LINK RAILING TYPE 3

DS OSD 2147A (METRIC) (REV. 2/25/97)

ORIGINAL SCALE IN MILLIMETERS FOR REDUCED PLANS 0 10 20 30 40 50 60 70 80 90 100

CU EA

DISREGARD PRINTS BEARING EARLIER REVISION DATES

REVISION DATES (PRELIMINARY STAGE ONLY) SHEET OF

USERNAME => jsanchez

xs16-310.dgn

DATE PLOTTED => 16-JAN-2004 TIME PLOTTED => 15:15