DIST.	COUNTY	ROUTE	KILOMETER POST TOTAL PROJECT	SHEET NO.	TOTAL SHEETS

Caltrans Metric

REGISTERED ENGINEER - CIVIL

PLANS APPROVAL DATE

REGISTERED PROFESSIONAL ENGINEER No. Exp. CIVIL STATE OF CALIFORNIA

The State of California or its officers or agents shall not be responsible for the accuracy or completeness of electronic copies of this plan sheet.

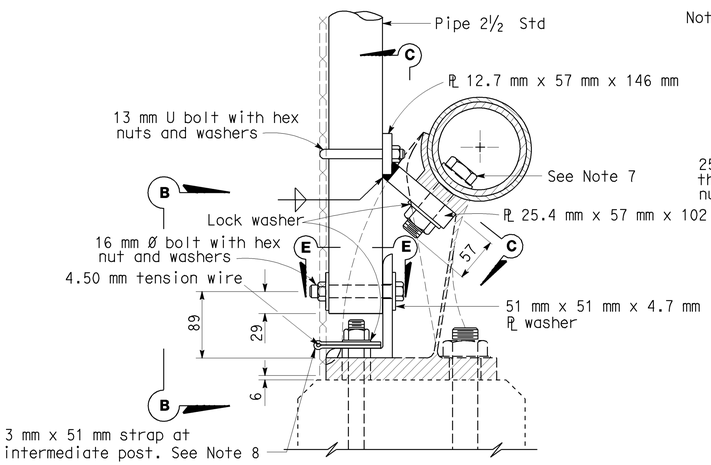

SECTION A-A
(SINGLE PIPE RAIL)

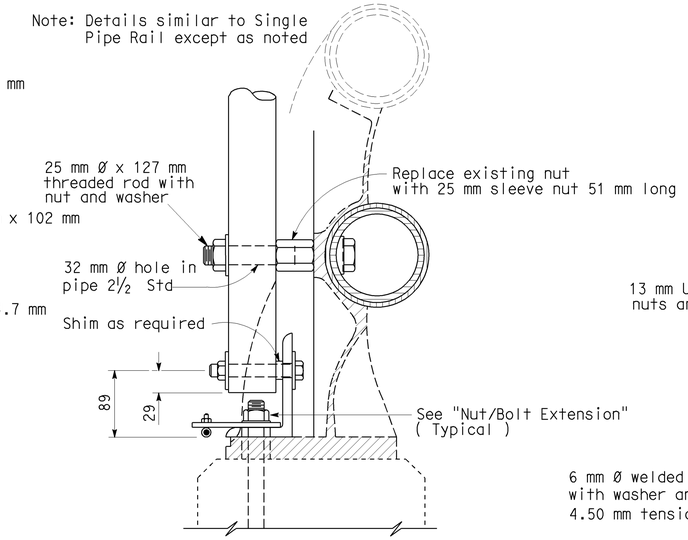

SECTION A-A
(DOUBLE PIPE RAIL)

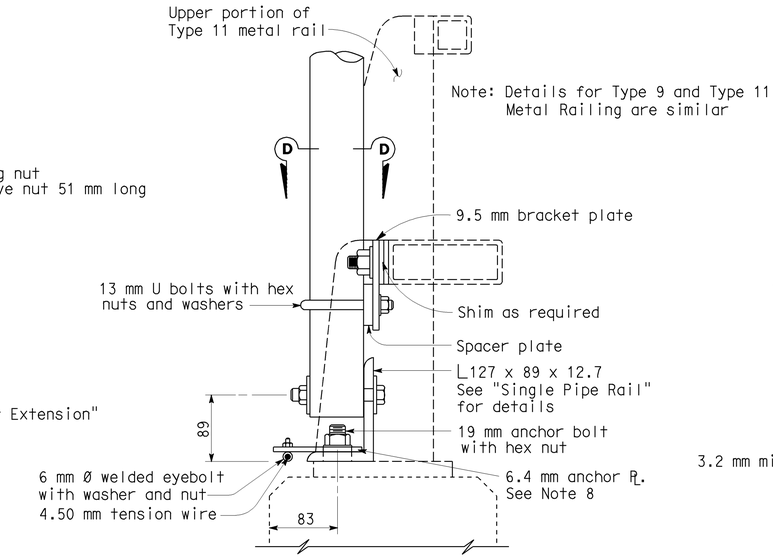

SECTION A-A
(TUBE RAIL)

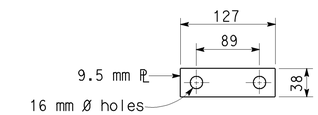

SPACER PLATE

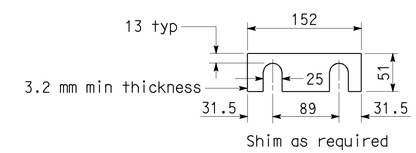

RAILING SHIM DETAIL

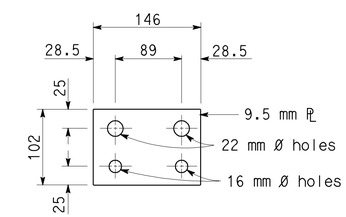

BRACKET PLATE

ATTACHMENT DETAILS

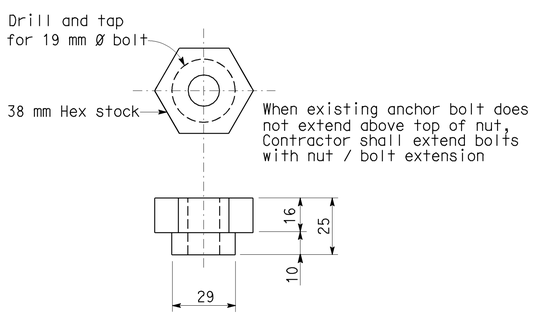

NUT/BOLT EXTENSION

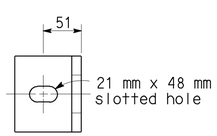

SECTION E-E

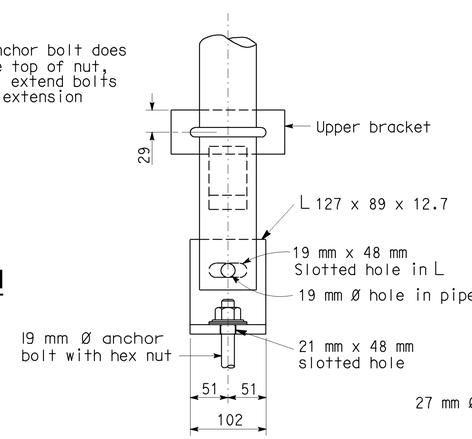

VIEW B-B
(Rail post not shown)

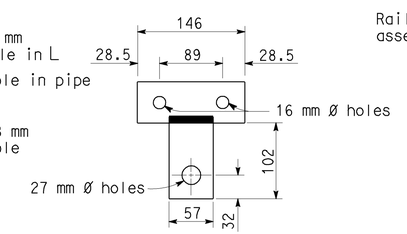

VIEW C-C
(Developed view of upper bracket)

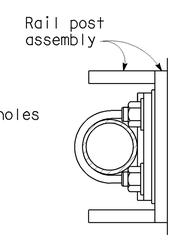

VIEW D-D

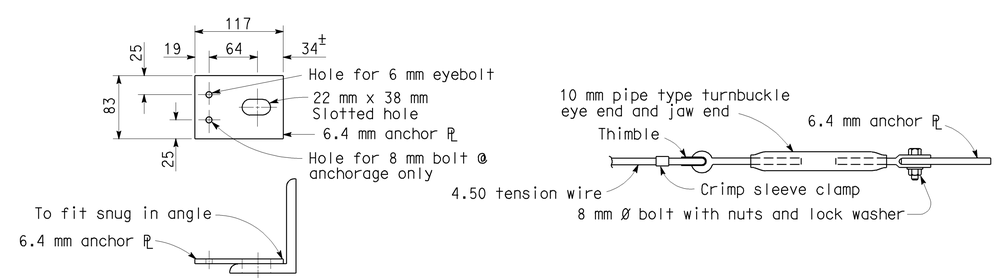

BOTTOM ANCHORAGE DETAIL

NO SCALE

ALL DIMENSIONS ARE IN MILLIMETERS UNLESS OTHERWISE SHOWN

STANDARD DRAWING					
RELEASE DATE 6/9/98	DESIGN	BY R.W. BISHOP	CHECKED J. HAMAGUCHI	RELEASED BY	
FILE NO. xs16-320-2	DETAILS	BY R.YEE	CHECKED J. HAMAGUCHI		
	SUBMITTED	BY R.W. BISHOP	DRAWING DATE 5/87	OFFICE CHIEF	

STATE OF CALIFORNIA DEPARTMENT OF TRANSPORTATION

DIVISION OF ENGINEERING SERVICES

BRIDGE NO.

KILOMETER POST

CHAIN LINK RAILING TYPE 4 - SHEET 2 OF 2

DS OSD 2147A (METRIC) (REV. 2/25/97)

ORIGINAL SCALE IN MILLIMETERS FOR REDUCED PLANS 0 10 20 30 40 50 60 70 80 90 100

CU
EA

DISREGARD PRINTS BEARING EARLIER REVISION DATES

REVISION DATES (PRELIMINARY STAGE ONLY) SHEET OF

USERNAME => jsanchez

xs16-320-2.dgn

DATE PLOTTED => 16-JAN-2004 TIME PLOTTED => 15:16