DIST.	COUNTY	ROUTE	KILOMETER POST TOTAL PROJECT	SHEET NO.	TOTAL SHEETS

Caltrans Metric

REGISTERED ENGINEER - CIVIL

PLANS APPROVAL DATE

REGISTERED PROFESSIONAL ENGINEER No. Exp. CIVIL STATE OF CALIFORNIA

The State of California or its officers or agents shall not be responsible for the accuracy or completeness of electronic copies of this plan sheet.

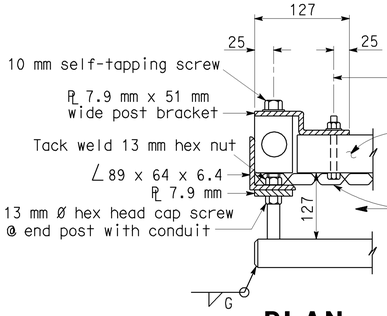

PLAN

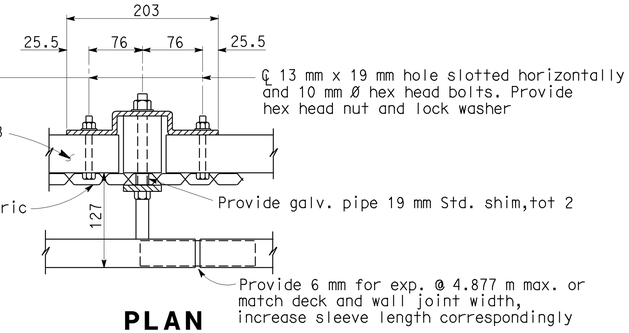

PLAN

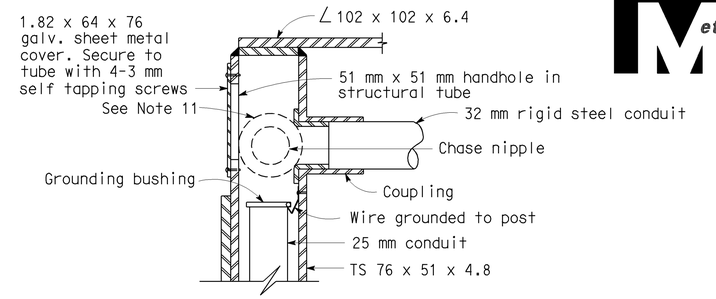

END POST SECTION

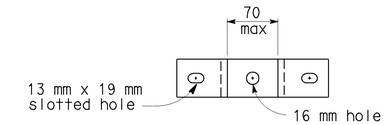

POST BRACKET

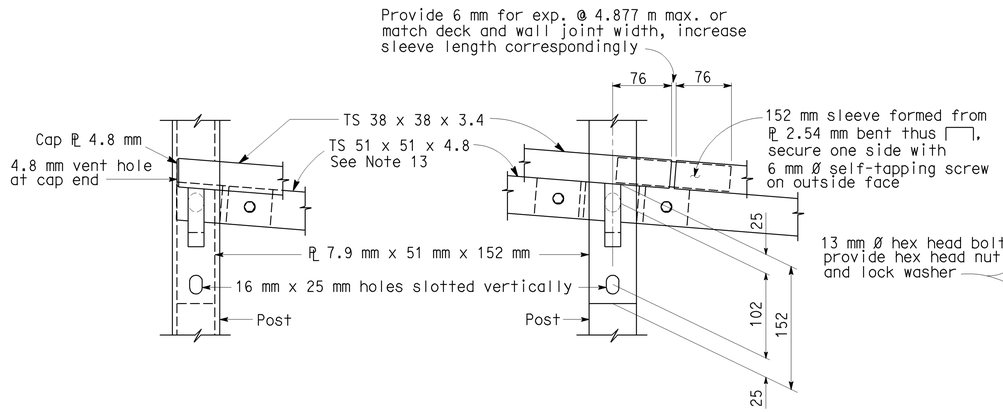

ELEVATION END POST

ELEVATION INTERMEDIATE POST

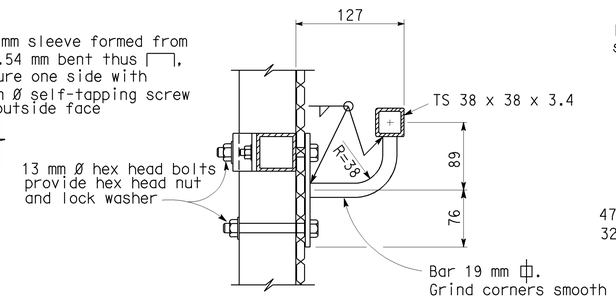

SIDE VIEW
End post not shown

TUBULAR HANDRAIL BRACKET DETAILS

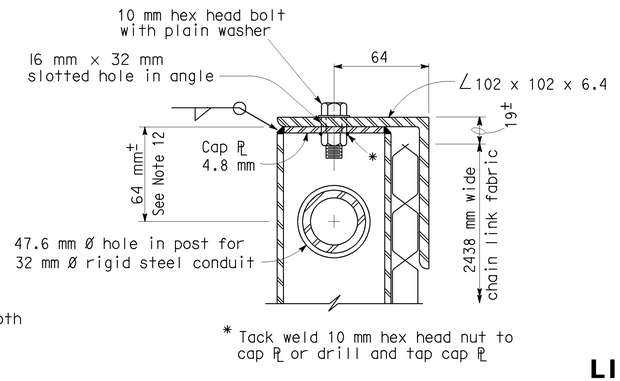

SECTION C-C

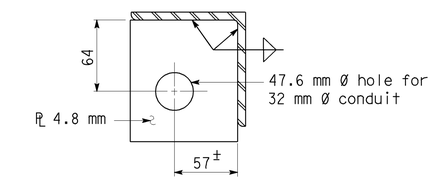

LIGHT FIXTURE HANGER

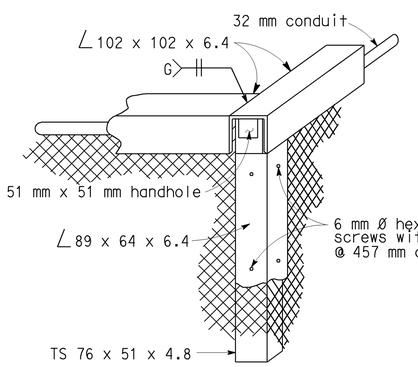

INSIDE CORNER

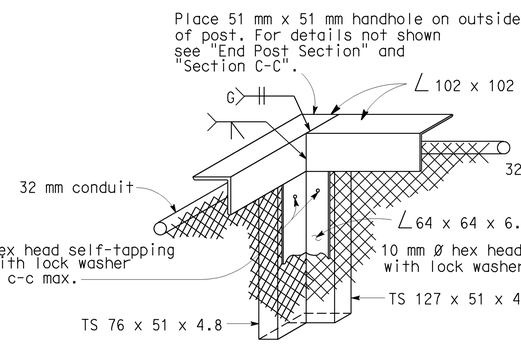

ALTERNATIVE 1

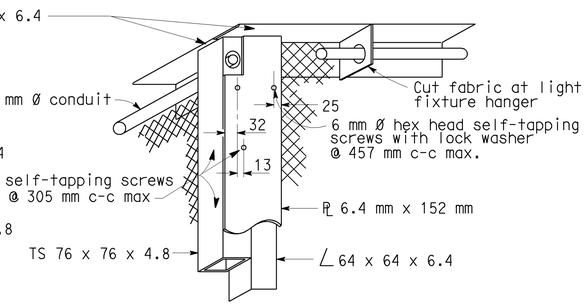

ALTERNATIVE 2

OUTSIDE CORNER

CORNER POST DETAILS

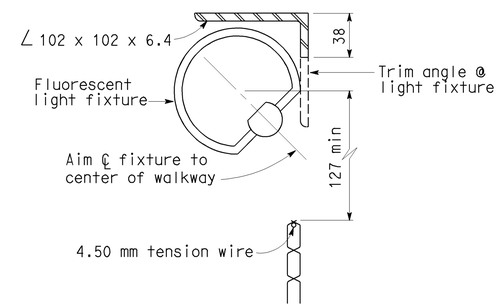

SECTION D-D

NO SCALE

ALL DIMENSIONS ARE IN MILLIMETERS UNLESS OTHERWISE SHOWN

STANDARD DRAWING				
RELEASE DATE 6/8/98	DESIGN	BY R.W. BISHOP	CHECKED PH	RELEASED BY
FILE NO. xs16-350-2	DETAILS	BY R. YEE	CHECKED PH	OFFICE CHIEF
	SUBMITTED	BY J. HAMAGUCHI	DRAWING DATE 12/74	

STATE OF CALIFORNIA DEPARTMENT OF TRANSPORTATION

DIVISION OF ENGINEERING SERVICES

BRIDGE NO.

KILOMETER POST

CHAIN LINK RAILING TYPE 7L SHEET 2 OF 2

DS OSD 2147A (METRIC) (REV. 2/25/97)

ORIGINAL SCALE IN MILLIMETERS FOR REDUCED PLANS 0 10 20 30 40 50 60 70 80 90 100

CU
EA

DISREGARD PRINTS BEARING EARLIER REVISION DATES

REVISION DATES (PRELIMINARY STAGE ONLY) SHEET OF

USERNAME => jsanchez

xs16-350-2.dgn

DATE PLOTTED => 16-JAN-2004 TIME PLOTTED => 15:18