DIST.	COUNTY	ROUTE	KILOMETER POST TOTAL PROJECT	SHEET NO.	TOTAL SHEETS

REGISTERED ENGINEER - CIVIL

PLANS APPROVAL DATE

REGISTERED PROFESSIONAL ENGINEER No. Exp. CIVIL STATE OF CALIFORNIA

The State of California or its officers or agents shall not be responsible for the accuracy or completeness of electronic copies of this plan sheet.

Caltrans Metric

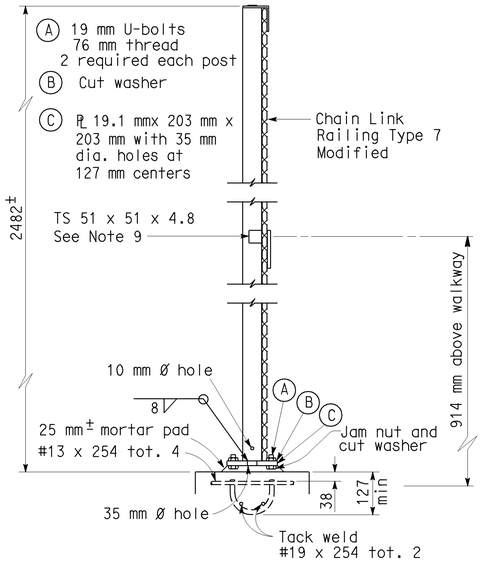

TYPICAL POST DETAIL

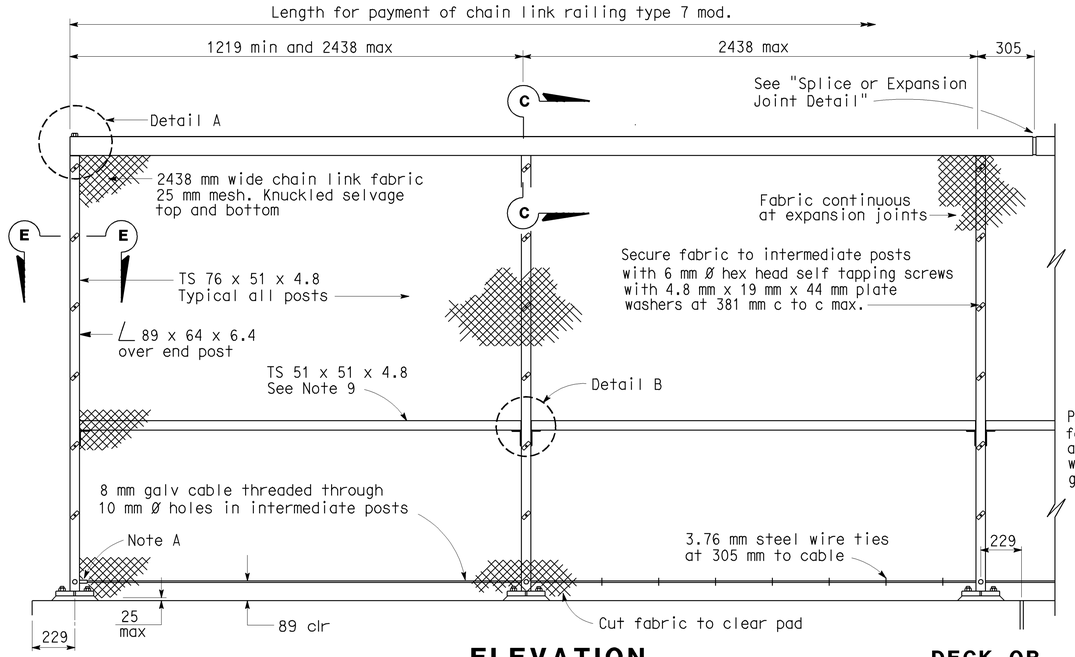

END POST

ELEVATION

DECK OR WALL JOINT

Note A: Anchor 8 mm galvanized cable at end post with 13 mm Ø stud socket assembly or 13 mm Ø welded eyebolt and crimped sleeve clamp. Provide 38 mm min. take-up at each anchorage.

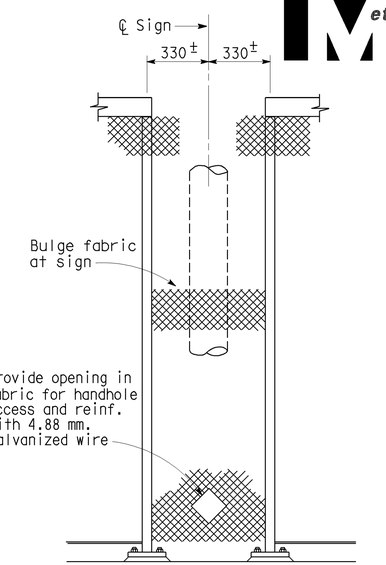

SIGN PANEL

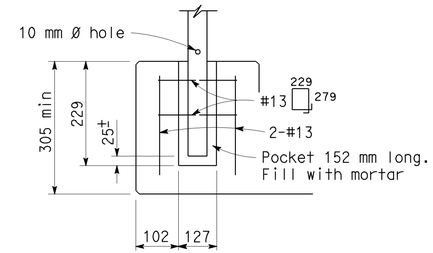

ALTERNATIVE ANCHORAGE DETAIL

May be used when thickness of concrete is 305 mm or more. Not to be used when post contains electrical conduit.

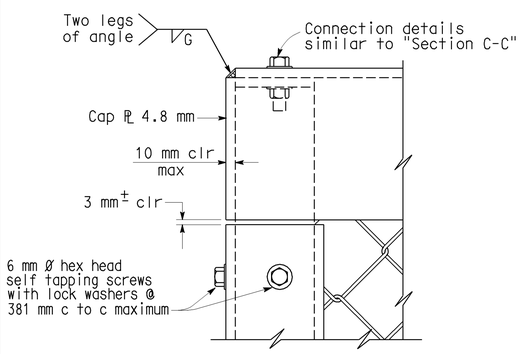

DETAIL A

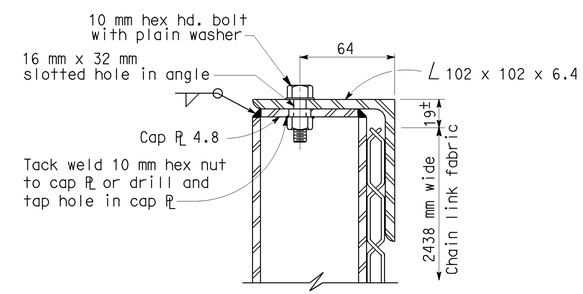

SECTION C-C

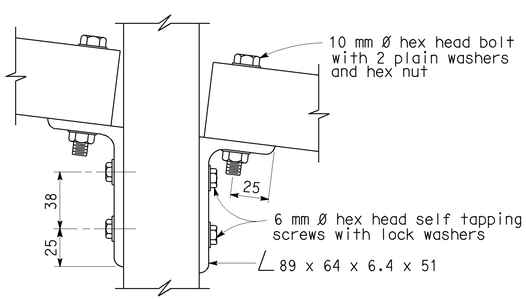

DETAIL B

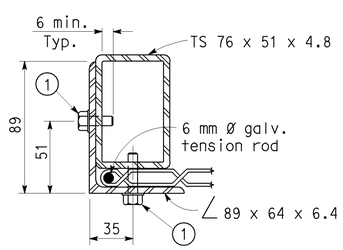

1 6 mm Ø hex head self-tapping screws with lock washers @ 381 mm c.to c. maximum

SECTION E-E

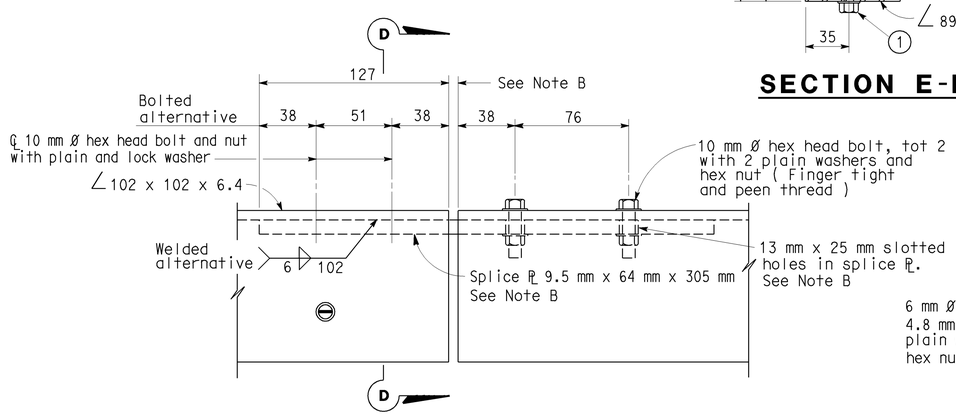

SPLICE OR EXPANSION JOINT DETAIL

Note B: Expansion joint same dimension as expansion joint in deck or wall. Increase slotted hole length and splice PL length correspondingly.

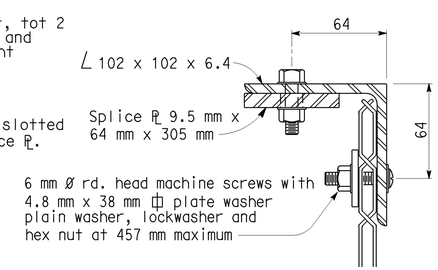

SECTION D-D

NOTES:

1. Railing assembly except chain link fabric to be galvanized after fabrication.
2. Railing shall conform to horizontal and vertical alignment. Post shall be vertical. Horizontal angle shall be bent to conform to horizontal alignment if radius is 45.72 m or less.
3. Horizontal angle shall be continuous over not less than two intermediate posts,except that a shorter length is permitted at expansion joints and other rail discontinuities.
4. When railing is placed on curved horizontal alignment with radius of 45.72 m or less,drill 13 mm Ø x 76 mm deep hole in slab and set in epoxy adhesives 10 mm Ø welded eyebolt for 8 mm cable to limit the midordinate distance between the 8 mm cable and curve to be 25 mm max.
5. Place fabric parallel to slope.
6. Alternative details may be submitted by the Contractor for Engineer's approval.
7. Provide thimbles at all cable loops.
8. Peen all exposed bolts.
9. TS 51 x 51 x 4.8 required for curves with radius of 45.72 or less. Bend to conform to curve.

ALL DIMENSIONS ARE IN MILLIMETERS UNLESS OTHERWISE SHOWN

NO SCALE

STANDARD DRAWING

RELEASE DATE 6/9/98	DESIGN BY R.W. BISHOP	CHECKED J. HAMAGUCHI	RELEASED BY
FILE NO. xs16-360	DETAILS BY R. YEE	CHECKED J. HAMAGUCHI	OFFICE CHIEF
	SUBMITTED BY R.W. BISHOP	DRAWING DATE 12/76	

STATE OF CALIFORNIA DEPARTMENT OF TRANSPORTATION

DIVISION OF ENGINEERING SERVICES

BRIDGE NO.

KILOMETER POST

CHAIN LINK RAILING TYPE 7 MODIFIED

DS OSD 2147A (METRIC) (REV. 2/25/97)

ORIGINAL SCALE IN MILLIMETERS FOR REDUCED PLANS 0 10 20 30 40 50 60 70 80 90 100

CU EA

DISREGARD PRINTS BEARING EARLIER REVISION DATES

REVISION DATES (PRELIMINARY STAGE ONLY) SHEET OF

USERNAME => jsanchez

xs16-360.dgn

DATE PLOTTED => 16-JAN-2004 TIME PLOTTED => 15:18