DIST.	COUNTY	ROUTE	KILOMETER POST TOTAL PROJECT	SHEET NO.	TOTAL SHEETS

Caltrans Metric

REGISTERED ENGINEER - CIVIL

PLANS APPROVAL DATE

REGISTERED PROFESSIONAL ENGINEER No. Exp. CIVIL STATE OF CALIFORNIA

The State of California or its officers or agents shall not be responsible for the accuracy or completeness of electronic copies of this plan sheet.

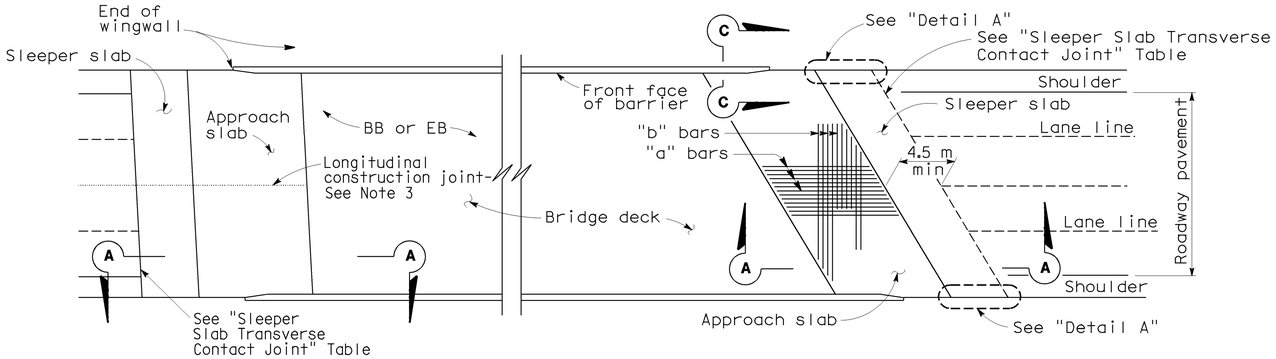

PLAN

NOTE: For Section C-C, see "Structure Approach Type N (14D) Details No.2" sheet.

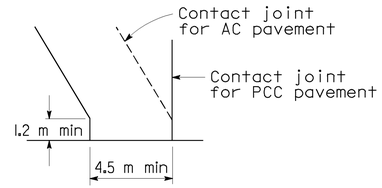

DETAIL A

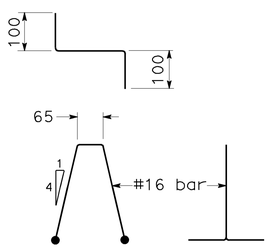

BAR CHAIR DETAIL

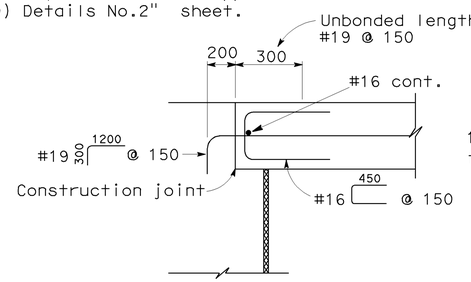

ALTERNATIVE 1

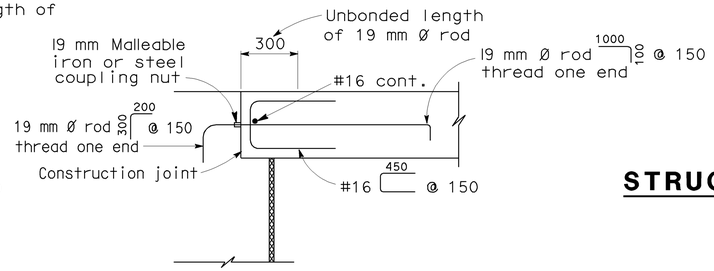

ALTERNATIVE 2

DIAPHRAGM TYPE ABUTMENT TIE DETAILS (SEE NOTE 1)

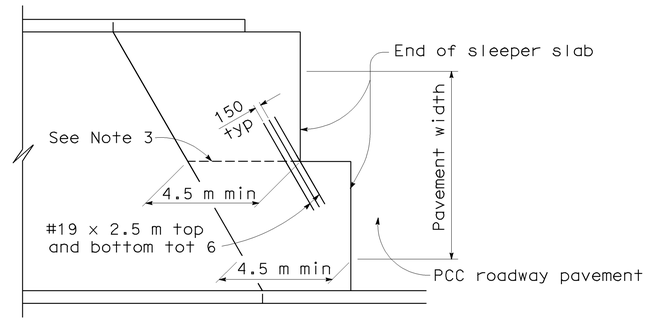

STRUCTURE APPROACH - END STAGGER DETAIL

APPROACH SLAB TRANSVERSE CONTACT JOINT		
APPROACH SKEW	WITH AC ROADWAY PAVEMENT	WITH PCC ROADWAY PAVEMENT
< 20°	Parallel to face of paving notch	Parallel to face of paving notch
20°- 45°	Parallel to face of P N use (Detail A)	Stagger lines 7.2 m to 10.8 m apart
> 45°	Parallel to face of P N use (Detail A)	Stagger at each lane line

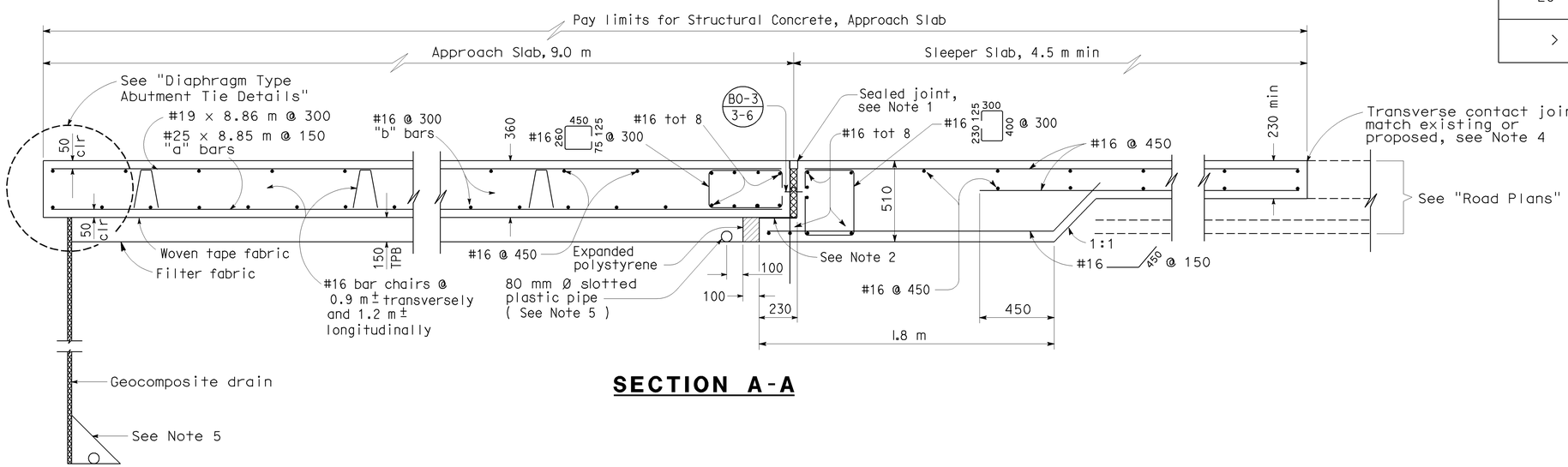

SECTION A-A

NOTES:

1. For details not noted or shown, see Structure Plans.
2. Sliding joint 7 x 225 neoprene strip, coat top with silicone grease and cover with 225 x 1.613 galvanized sheet metal.
3. Longitudinal construction joints, when permitted by the Engineer, shall be located on lane lines.
4. For transverse contact joint with new PCC paving, refer to Standard Plan P10.
5. For drainage details, see "Structure Approach Drainage Details" sheet.
6. At the contractor's option, slab transverse reinforcement may be placed parallel to paving notch. Spacing of transverse reinforcement is measured along ℄ roadway.

NO SCALE

ALL DIMENSIONS ARE IN MILLIMETERS UNLESS OTHERWISE SHOWN

STANDARD DRAWING				
RELEASE DATE 3/14/05	DESIGN BY M.TRAFFALIS	CHECKED E.THORKILDSEN	RELEASED BY	
FILE NO. xs3-010-1	DETAILS BY R.YEE	CHECKED E.THORKILDSEN		
	SUBMITTED BY M.HA	DRAWING DATE 4/98	OFFICE CHIEF	

STATE OF CALIFORNIA DEPARTMENT OF TRANSPORTATION

DIVISION OF ENGINEERING SERVICES

BRIDGE NO.

KILOMETER POST

STRUCTURE APPROACH TYPE N (14D) DETAILS NO. 1

DS OSD 2147A (METRIC) (REV. 2/25/97)

ORIGINAL SCALE IN MILLIMETERS FOR REDUCED PLANS 0 10 20 30 40 50 60 70 80 90 100

CU EA

DISREGARD PRINTS BEARING EARLIER REVISION DATES

REVISION DATES (PRELIMINARY STAGE ONLY) SHEET OF

USERNAME => jsanchez

xs3-010-1.dgn

DATE PLOTTED => 01-APR-2005 TIME PLOTTED => 13:37