DIST.	COUNTY	ROUTE	KILOMETER POST TOTAL PROJECT	SHEET NO.	TOTAL SHEETS

Caltrans Metric

REGISTERED ENGINEER - CIVIL

PLANS APPROVAL DATE

REGISTERED PROFESSIONAL ENGINEER No. Exp. CIVIL STATE OF CALIFORNIA

The State of California or its officers or agents shall not be responsible for the accuracy or completeness of electronic copies of this plan sheet.

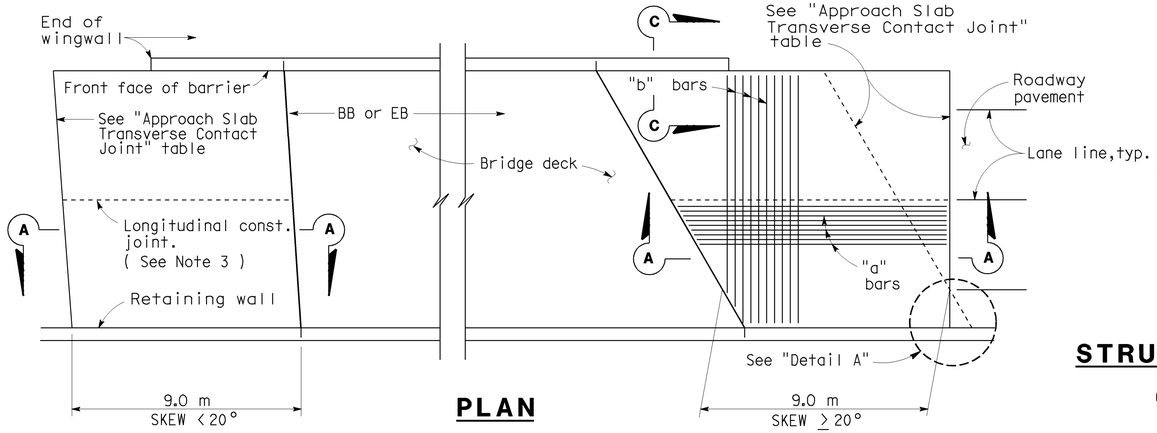

PLAN

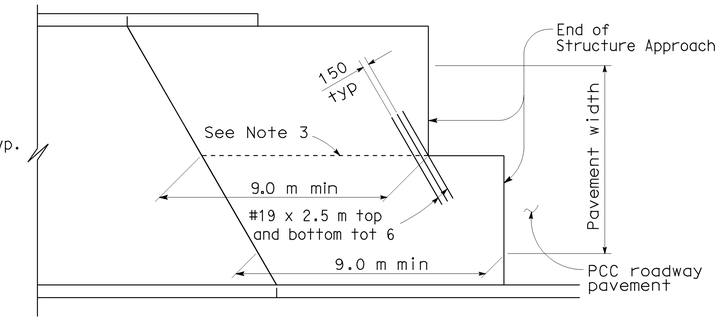

STRUCTURE APPROACH - END STAGGER DETAIL

APPROACH SLAB TRANSVERSE CONTACT JOINT		
APPROACH SKEW	WITH AC ROADWAY PAVEMENT	WITH PCC ROADWAY PAVEMENT
< 20°	Parallel to face of paving notch	Parallel to face of paving notch
20°- 45°	Parallel to face of P N use (Detail A)	Stagger lines 7.2 m to 10.8 m apart.
> 45°	Parallel to face of P N use (Detail A)	Stagger at each lane line.

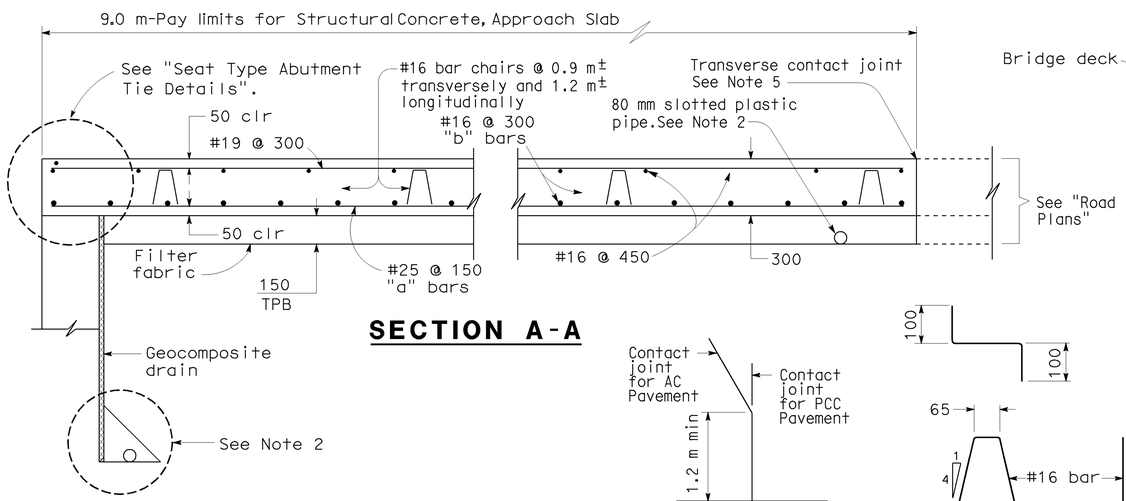

SECTION A-A

DETAIL A

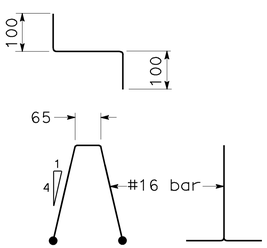

BAR CHAIR DETAIL

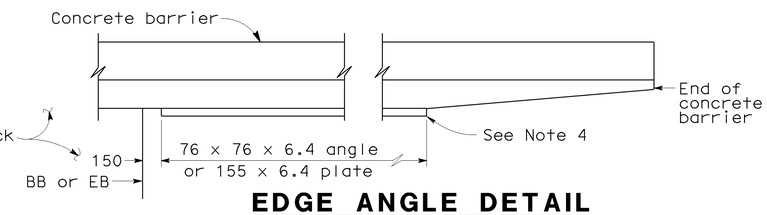

EDGE ANGLE DETAIL

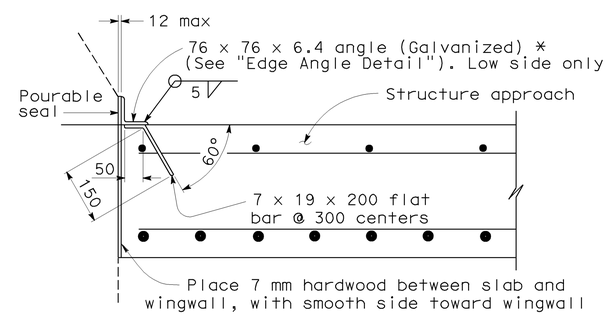

*(TO BE USED WITH TYPE 25 OR TYPE 27 CONCRETE BARRIER)

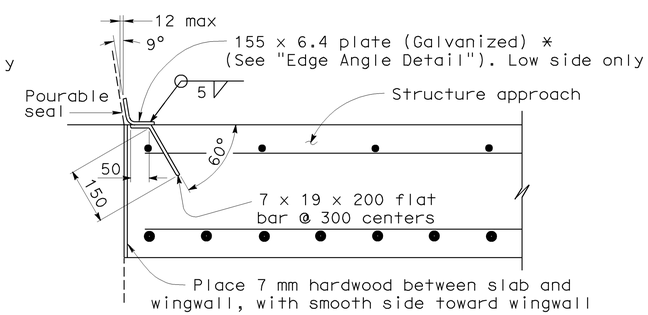

*(TO BE USED WITH TYPE 732 OR TYPE 736 CONCRETE BARRIER)

DETAIL B

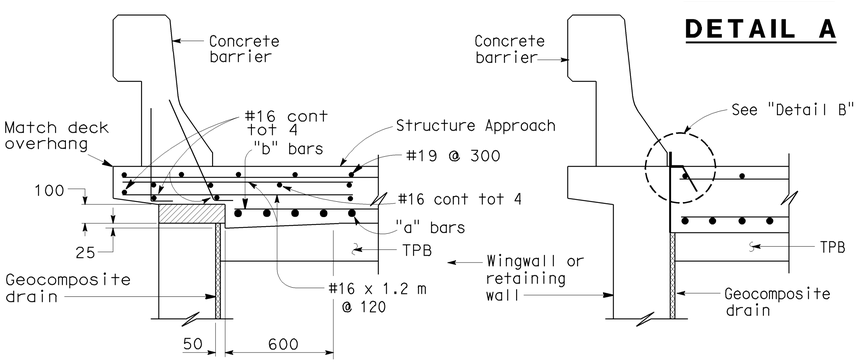

TYPE E-1

TYPE E-2

SECTION C-C

(Type E-1 to be used,unless otherwise shown on plans)

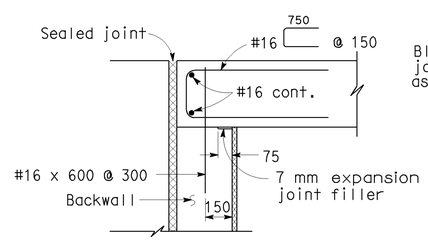

MR ≤ 50 mm

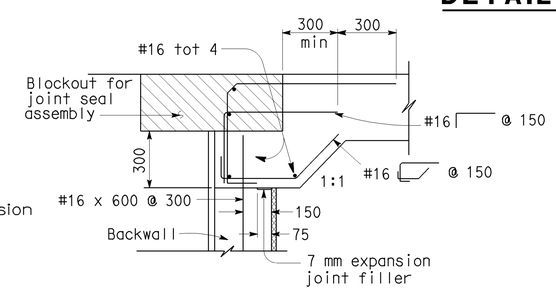

MR > 50 mm

SEAT TYPE ABUTMENT TIE DETAILS (SEE NOTE 1)

NOTES:

1. For details not shown,see Structure Plans. For MR ≤ 50 mm,adjust bar reinforcement to clear a sawcut for sealed joint,when required.
2. For drainage details,see "Structure Approach Drainage Details" sheet.
3. Longitudinal construction joints,when permitted by the Engineer, shall be located on lane lines.
4. End angle or plate at beginning of barrier transition, end of wingwall or end of structure approach as applicable.
5. For transverse contact joint with new PCC paving, refer to Standard Plan P10.
6. At the contractor's option, approach slab transverse reinforcement may be placed parallel to paving notch. Spacing of transverse reinforcement is measured along ℄ roadway.

Remove all polystyrene.

NO SCALE

ALL DIMENSIONS ARE IN MILLIMETERS UNLESS OTHERWISE SHOWN

STANDARD DRAWING				
RELEASE DATE 3/14/05	DESIGN BY M. TRAFFALIS	CHECKED E. THORKILDSEN	RELEASED BY	
FILE NO. xs3-120	DETAILS BY R. YEE	CHECKED E. THORKILDSEN		
	SUBMITTED BY M. HA	DRAWING DATE 4/98	OFFICE CHIEF	

STATE OF CALIFORNIA DEPARTMENT OF TRANSPORTATION

DIVISION OF ENGINEERING SERVICES

BRIDGE NO.

KILOMETER POST

STRUCTURE APPROACH TYPE N(9S)

DS OSD 2147A (METRIC) (REV. 2/25/97)

ORIGINAL SCALE IN MILLIMETERS FOR REDUCED PLANS 0 10 20 30 40 50 60 70 80 90 100

CU EA

DISREGARD PRINTS BEARING EARLIER REVISION DATES

REVISION DATES (PRELIMINARY STAGE ONLY) SHEET OF

USERNAME => jsanchez

xs3-120.dgn

DATE PLOTTED => 01-APR-2005 TIME PLOTTED => 13:37