DIST.	COUNTY	ROUTE	KILOMETER POST TOTAL PROJECT	SHEET NO.	TOTAL SHEETS

Caltrans Metric

REGISTERED ENGINEER - CIVIL

PLANS APPROVAL DATE

REGISTERED PROFESSIONAL ENGINEER No. Exp. CIVIL STATE OF CALIFORNIA

The State of California or its officers or agents shall not be responsible for the accuracy or completeness of electronic copies of this plan sheet.

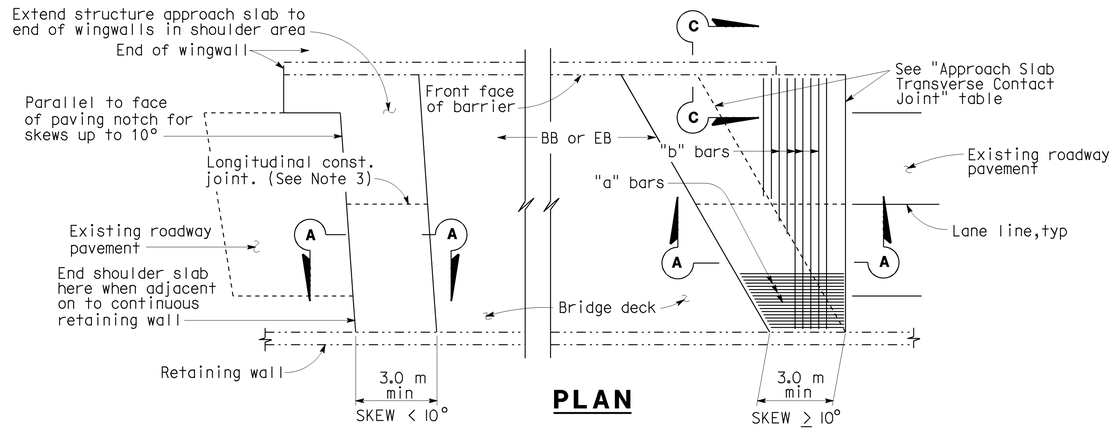

PLAN

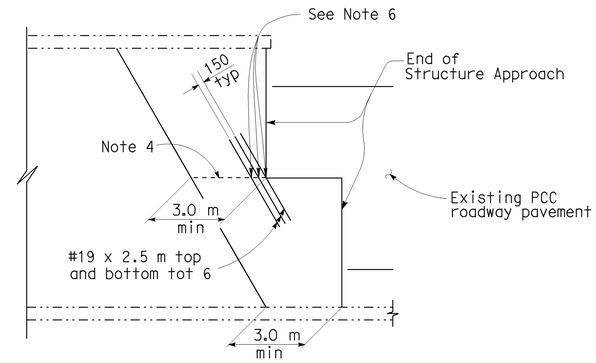

STRUCTURE APPROACH - END STAGGER DETAIL

APPROACH SLAB TRANSVERSE CONTACT JOINT		
APPROACH SKEW	WITH AC ROADWAY PAVEMENT	WITH PCC ROADWAY PAVEMENT
< 10°	Parallel to face of paving notch	Parallel to face of paving notch
10°- 45°	Parallel to face of P N use (Detail A)	Stagger lines 7.2 m to 10.8 m apart
> 45°	Parallel to face of P N use (Detail A)	Stagger at each lane line

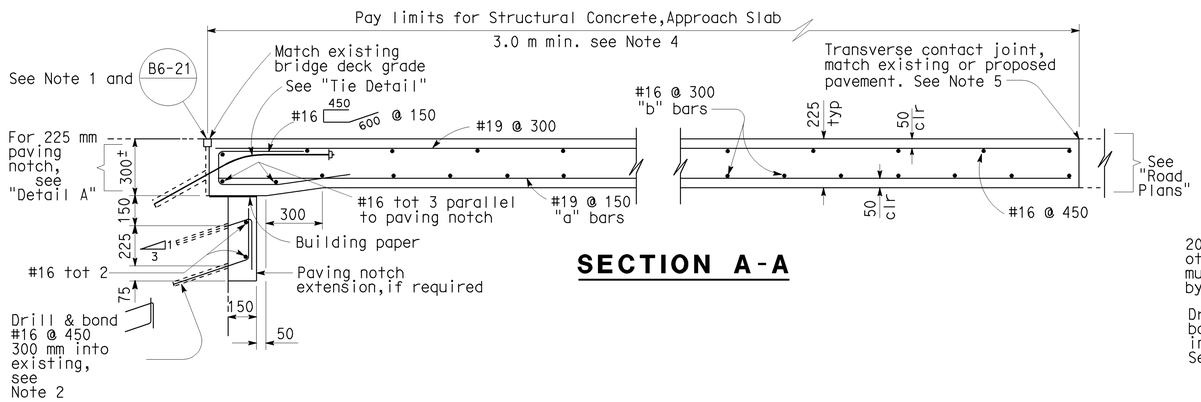

SECTION A-A

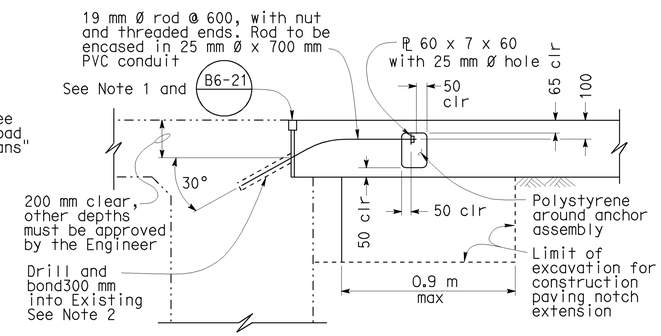

TIE DETAIL

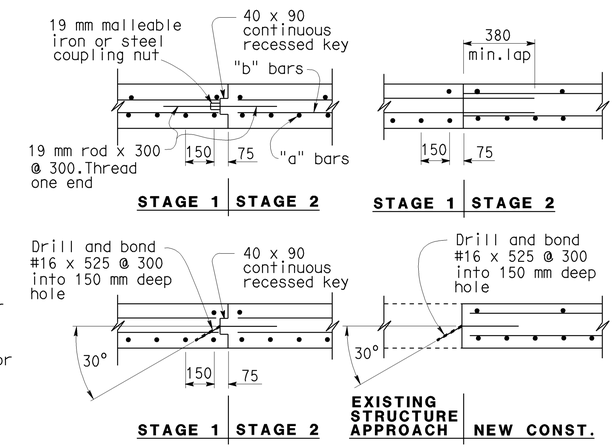

LONGITUDINAL CONSTRUCTION JOINT ALTERNATIVES

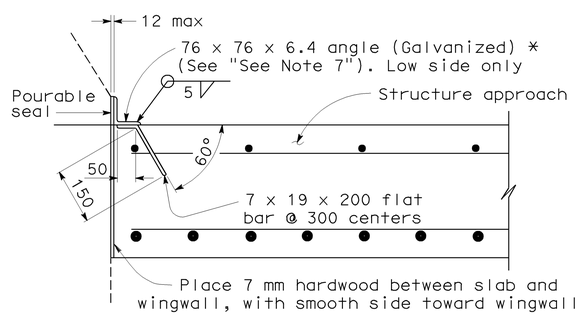

*(TO BE USED WITH TYPE 25 OR TYPE 27 CONCRETE BARRIER)

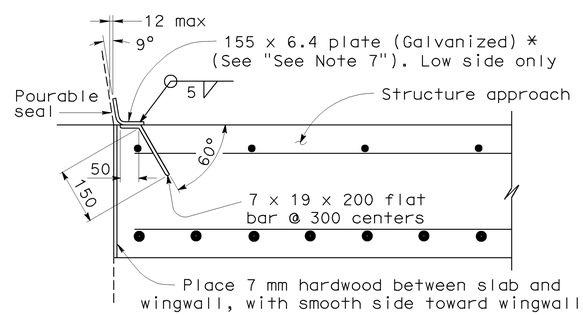

*(TO BE USED WITH TYPE 732 OR TYPE 736 CONCRETE BARRIER)

DETAIL B

NOTE:

THE CONTRACTOR SHALL VERIFY ALL CONTROLLING FIELD DIMENSIONS BEFORE ORDERING OR FABRICATING ANY MATERIAL.

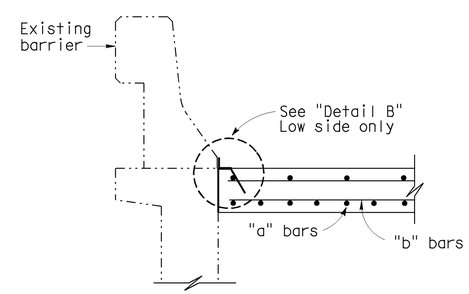

SECTION C-C

NOTES:

1. For details not noted or shown,see Structure Plans. Adjust bar reinforcement to clear a sawcut for sealed joint,when required.
2. Space to avoid existing prestress anchorages and main reinforcement.
3. Longitudinal construction joints,when permitted by the Engineer,shall be located on lane lines.
4. Transverse contact joint shall be a minimum of 1.5 m from an existing or constructed weakened plane joint.
5. For transverse contact joint with new PCC paving, refer to Standard Plan P10.
6. Couplers are required for stage construction.
7. End angle or plate at beginning of barrier transition, end of wingwall or end of structure approach as applicable.

NO SCALE

ALL DIMENSIONS ARE IN MILLIMETERS UNLESS OTHERWISE SHOWN

STANDARD DRAWING					
RELEASE DATE 3/14/05	DESIGN	BY M. TRAFFALIS	CHECKED E. THORKILDSEN	RELEASED BY	
FILE NO. xs3-170	DETAILS	BY R. YEE	CHECKED E. THORKILDSEN		
	SUBMITTED	BY M. HA	DRAWING DATE 8/92	OFFICE CHIEF	

STATE OF CALIFORNIA DEPARTMENT OF TRANSPORTATION

DIVISION OF ENGINEERING SERVICES

BRIDGE NO.

KILOMETER POST

STRUCTURE APPROACH TYPE R(3D)

DS OSD 2147A (METRIC) (REV. 2/25/97)

ORIGINAL SCALE IN MILLIMETERS FOR REDUCED PLANS 0 10 20 30 40 50 60 70 80 90 100

CU EA

DISREGARD PRINTS BEARING EARLIER REVISION DATES

REVISION DATES (PRELIMINARY STAGE ONLY) SHEET OF

USERNAME => jsanchez

xs3-170.dgn

DATE PLOTTED => 01-APR-2005 TIME PLOTTED => 13:38