DIST.	COUNTY	ROUTE	KILOMETER POST TOTAL PROJECT	SHEET NO.	TOTAL SHEETS

Caltrans Metric

REGISTERED ENGINEER - CIVIL

PLANS APPROVAL DATE

REGISTERED PROFESSIONAL ENGINEER No. Exp. CIVIL STATE OF CALIFORNIA

The State of California or its officers or agents shall not be responsible for the accuracy or completeness of electronic copies of this plan sheet.

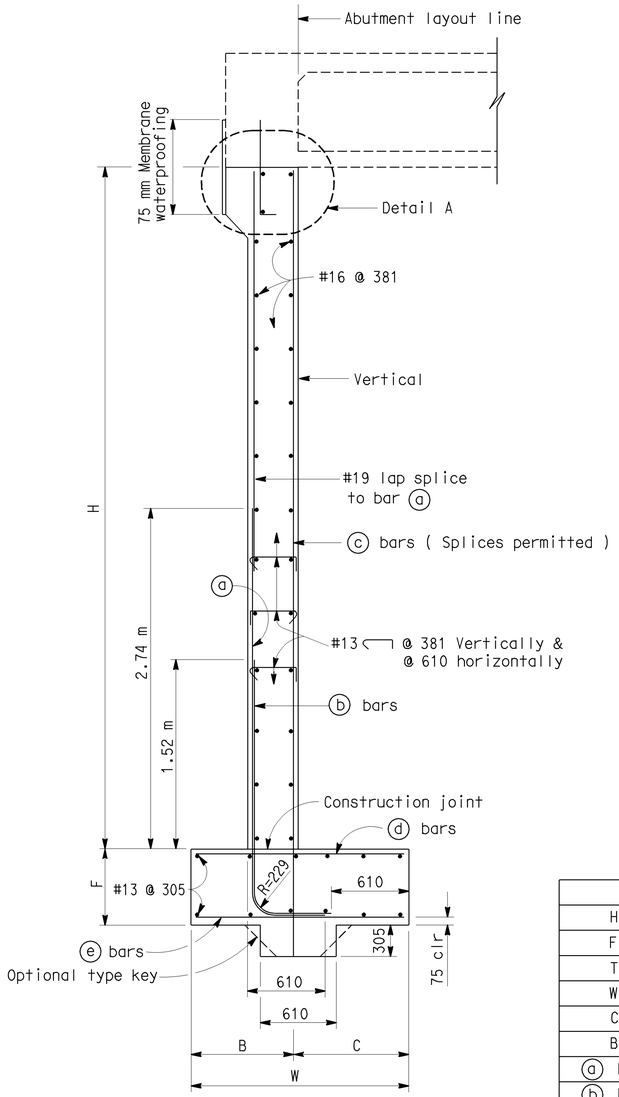

SECTION

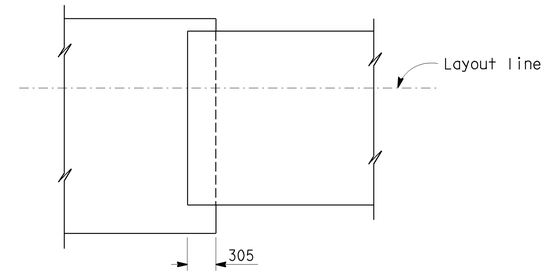

PLAN

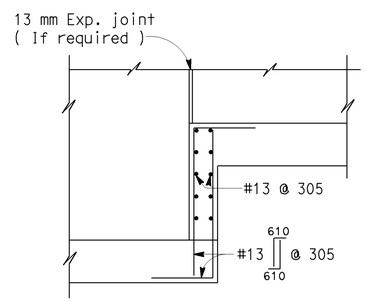

ELEVATION

FOOTING STEP

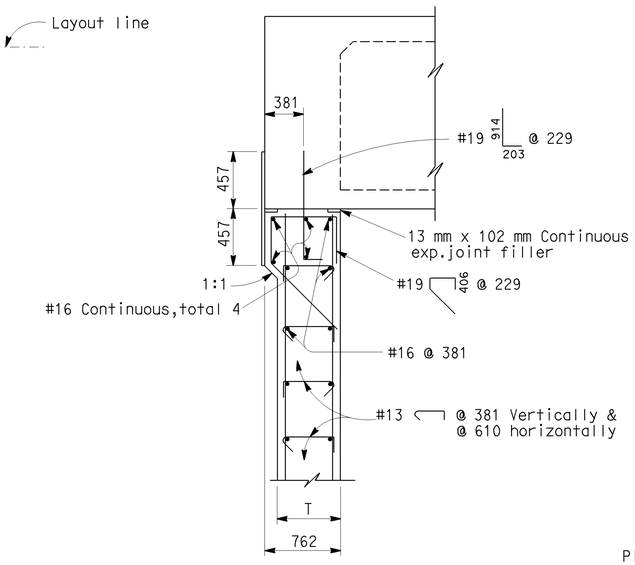

DETAIL A

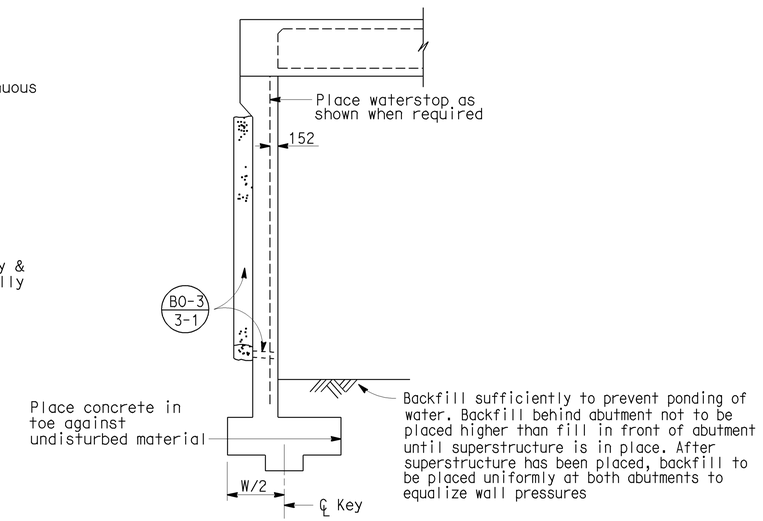

DRAINAGE AND BACKFILL

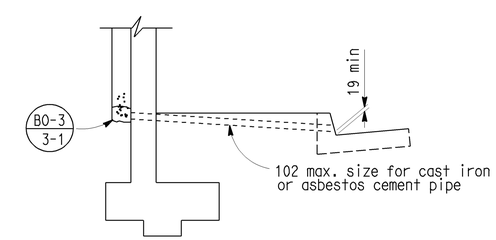

DRAIN THROUGH CURB

TABLE OF REINFORCING STEEL, DIMENSIONS AND DATA						
H	5.48 m	6.09 m	6.70 m	7.31 m	7.92 m	8.53 m
F	610	610	610	686	737	787
T	356	406	457	508	559	610
W	1.98 m	2.2 m	2.43 m	2.66 m	2.90 m	3.12 m
C	1.04 m	1.16 m	1.29 m	1.39 m	1.52 m	1.65 m
B	.93 m	1.04 m	1.14 m	1.26 m	1.37 m	1.47 m
(a) bars	#29 @ 381	#32 @ 432	#32 @ 381	#36 @ 406	#36 @ 381	#36 @ 356
(b) bars	#29 @ 381	#32 @ 432	#32 @ 381	#36 @ 406	#36 @ 381	#36 @ 356
(c) bars	#29 @ 190	#10 @ 216	#32 @ 191	#36 @ 203	#36 @ 191	#36 @ 178
(d) bars	#13 @ 190	#13 @ 216	#13 @ 191	#16 @ 203	#16 @ 191	#16 @ 178
(e) bars	#16 @ 190	#16 @ 216	#16 @ 191	#19 @ 203	#19 @ 191	#19 @ 178
Toe pr. K/sf	4.8	5.1	5.4	5.9	6.4	6.9
Conc. cf/ft	38.9	45.6	53.0	63.3	74.6	87.1
Steel lbs/ft	274	318	378	456	517	585

LOADING NOTES

Superstructure load assumed to vary between
5k - 20k per linear foot, H=6.7 m to H=8.53 m
5k - 17.5k per linear foot, H=5.48 m to H=6.09 m

610 mm Level surcharge used.

Depth of superstructure: 610 mm min., 2.13 m max.

DESIGN DATA:

fs = 20,000 psi, n = 10
fc = 1,200 psi

SOIL PARAMETERS:

ϕ = 34°
γ = 120 pcf

NOTES:

1. For joints required in wall, see (BO-3 / 3-3)
2. Quantities shown are for design purposes only.
3. See Project Plans for superstructure details.

NO SCALE

ALL DIMENSIONS ARE IN MILLIMETERS UNLESS OTHERWISE SHOWN

STANDARD DRAWING					
RELEASE DATE 11/2/92	DESIGN	BY J.L. Abcarius	CHECKED M.M. Ha	RELEASED BY Shannon L. Root OFFICE CHIEF	
FILE NO. xs4-010	DETAILS	BY R. Yee	CHECKED M.M. Ha		
	SUBMITTED	BY T.P. Jensen	DRAWING DATE 6/90		

STATE OF CALIFORNIA DEPARTMENT OF TRANSPORTATION

DIVISION OF ENGINEERING SERVICES

BRIDGE NO.

KILOMETER POST

STRUTTED ABUTMENT - SPREAD FOOTING

DS OSD 2147A (METRIC) (REV. 2/25/97)

ORIGINAL SCALE IN MILLIMETERS FOR REDUCED PLANS 0 10 20 30 40 50 60 70 80 90 100

CU
EA

DISREGARD PRINTS BEARING EARLIER REVISION DATES

REVISION DATES (PRELIMINARY STAGE ONLY) SHEET OF

USERNAME => jsanchez

xs4-010.dgn

DATE PLOTTED => 16-JAN-2004 TIME PLOTTED => 15:24