DIST.	COUNTY	ROUTE	KILOMETER POST TOTAL PROJECT	SHEET NO.	TOTAL SHEETS

Caltrans Metric

REGISTERED ENGINEER - CIVIL

PLANS APPROVAL DATE

REGISTERED PROFESSIONAL ENGINEER No. Exp. CIVIL STATE OF CALIFORNIA

The State of California or its officers or agents shall not be responsible for the accuracy or completeness of electronic copies of this plan sheet.

PRESTRESSING NOTES:

Post - tensioned prestressing will not be permitted.

Pf = the force per meter of panel width remaining after all losses including those due to creep and shrinkage of concrete and creep of steel have occurred.

Spacing of prestressing tendons shall not exceed 450 mm.

Concrete strength:

f'c = 24 MPa @ 28 days

f'ci = 24 MPa @ time of stressing

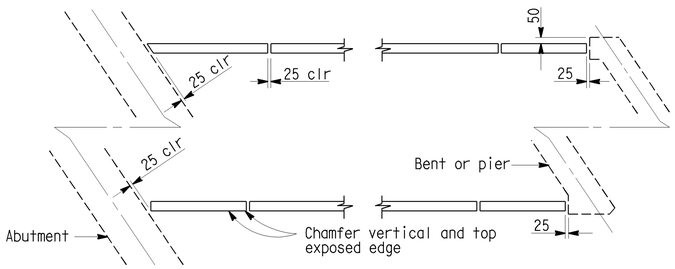

PLAN

Skew not to scale

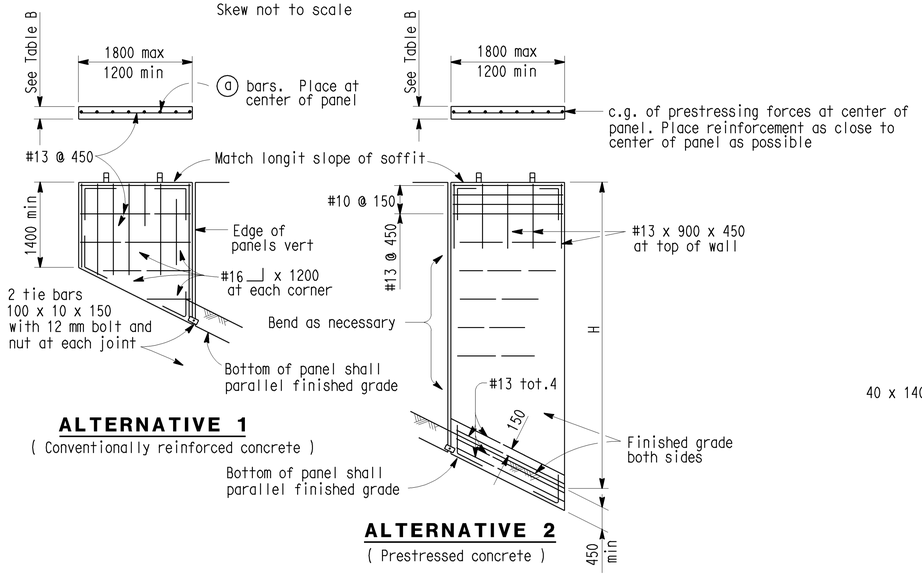

ALTERNATIVE 1

(Conventionally reinforced concrete)

ALTERNATIVE 2

(Prestressed concrete)

ELEVATION

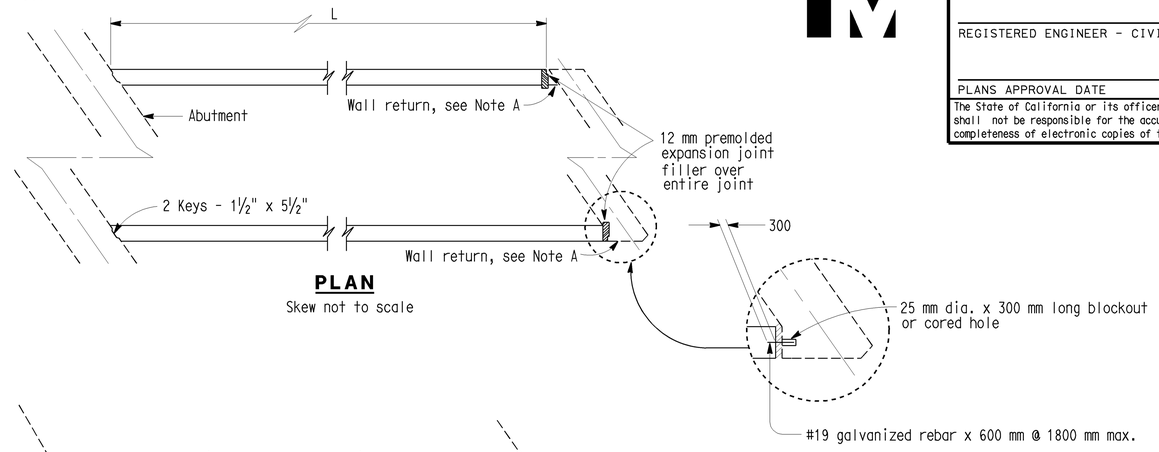

PLAN

Skew not to scale

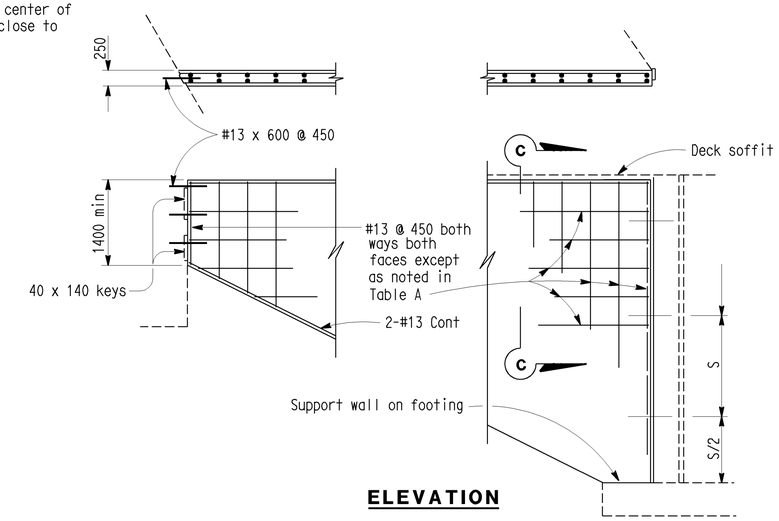

ELEVATION

NOTES:

1. Contractor to determine size of panels and location of anchorages. Panels shall be approximately equal in width within limits shown. Maximum weight of any panel not to exceed 5000 kg.
2. Panel to be backfilled uniformly on each side of panels.
3. Panels shall conform to horizontal and vertical alignment.
4. Panels to be erected vertically.
5. Galvanize all parts of anchorages and tie bar assemblies.
6. ⓐ bars or Pf may be selected for average H of any one panel.

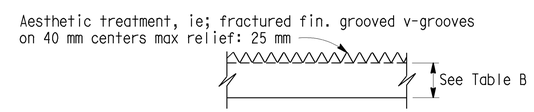

AESTHETIC TREATMENT DETAILS

No Scale

Note: To be used when required on Contract Plans

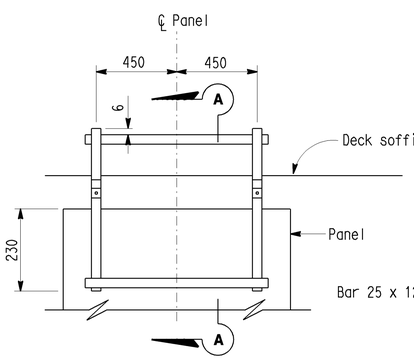

ANCHORAGE DETAIL

Use with Alternative 1 or 2

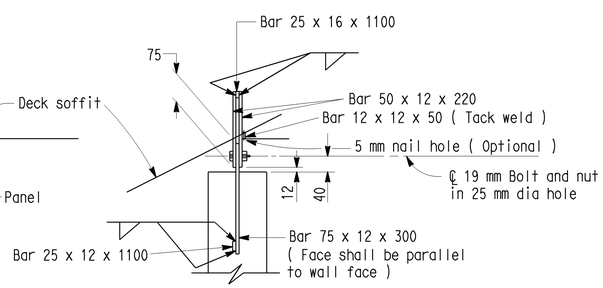

SECTION A-A

PRECAST PANELS, ALTERNATIVE 1 OR 2

No Scale

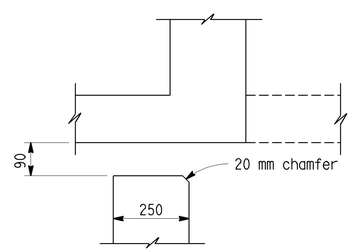

SECTION C-C

CAST-IN-PLACE, ALTERNATIVE 3

No Scale

Notes: A. Wall return may be omitted for skew 20° or less.
B. Wall to be placed after piers and abutments.

TABLE A

HORIZONTAL REINFORCEMENT INSIDE FACE TOP 2400 OF WALL	
L	
to 6000	#13 @ 450
6000 to 7600	#13 @ 300
7600 to 9000	#13 @ 230
9000 to 10 600	#13 @ 150
10 600 to 12 200	#13 @ 130
12 200 to 13 700	#16 @ 150
13 700 to 15 200	#16 @ 130

TABLE B

VERTICAL REINFORCEMENT OR PRESTRESSING FORCE AND WALL THICKNESS				
H	ALT 1	ALT 2	WALL THICKNESS	
	ⓐ bars	Pf (kN/m)	ALT 1	ALT 2
3000 & less	#13 @ 450	105	150	100
3600	#13 @ 450	155	150	100
4300	#13 @ 300	210	150	100
4900	#13 @ 250	266	150	100
5500	#13 @ 200	343	150	100
6100	#13 @ 150	420	150	100
6700	#13 @ 180	326	200	120
7300	#13 @ 150	388	200	120
7900	#13 @ 120	456	200	120

NO SCALE

ALL DIMENSIONS ARE IN MILLIMETERS UNLESS OTHERWISE SHOWN

STANDARD DRAWING					
RELEASE DATE 4/29/98	DESIGN	BY W.E. ELLIS	CHECKED ROBIN ROGERSON	RELEASED BY	
	DETAILS	BY R. YEE	CHECKED ROBIN ROGERSON		
FILE NO. xs4-110	SUBMITTED	BY	DRAWING DATE 4/98	OFFICE CHIEF	

STATE OF CALIFORNIA DEPARTMENT OF TRANSPORTATION

DIVISION OF ENGINEERING SERVICES

BRIDGE NO.

KILOMETER POST

CLOSURE WALL DETAILS

DS OSD 2147A (METRIC) (REV. 2/25/97)

ORIGINAL SCALE IN MILLIMETERS FOR REDUCED PLANS 0 10 20 30 40 50 60 70 80 90 100

CU EA

DISREGARD PRINTS BEARING EARLIER REVISION DATES

REVISION DATES (PRELIMINARY STAGE ONLY) SHEET OF

USERNAME => jsanchez

xs4-110.dgn

DATE PLOTTED => 16-JAN-2004 TIME PLOTTED => 15:25