DIST.	COUNTY	ROUTE	KILOMETER POST TOTAL PROJECT	SHEET NO.	TOTAL SHEETS

Caltrans Metric

REGISTERED ENGINEER - CIVIL

PLANS APPROVAL DATE

REGISTERED PROFESSIONAL ENGINEER No. Exp. CIVIL STATE OF CALIFORNIA

The State of California or its officers or agents shall not be responsible for the accuracy or completeness of electronic copies of this plan sheet.

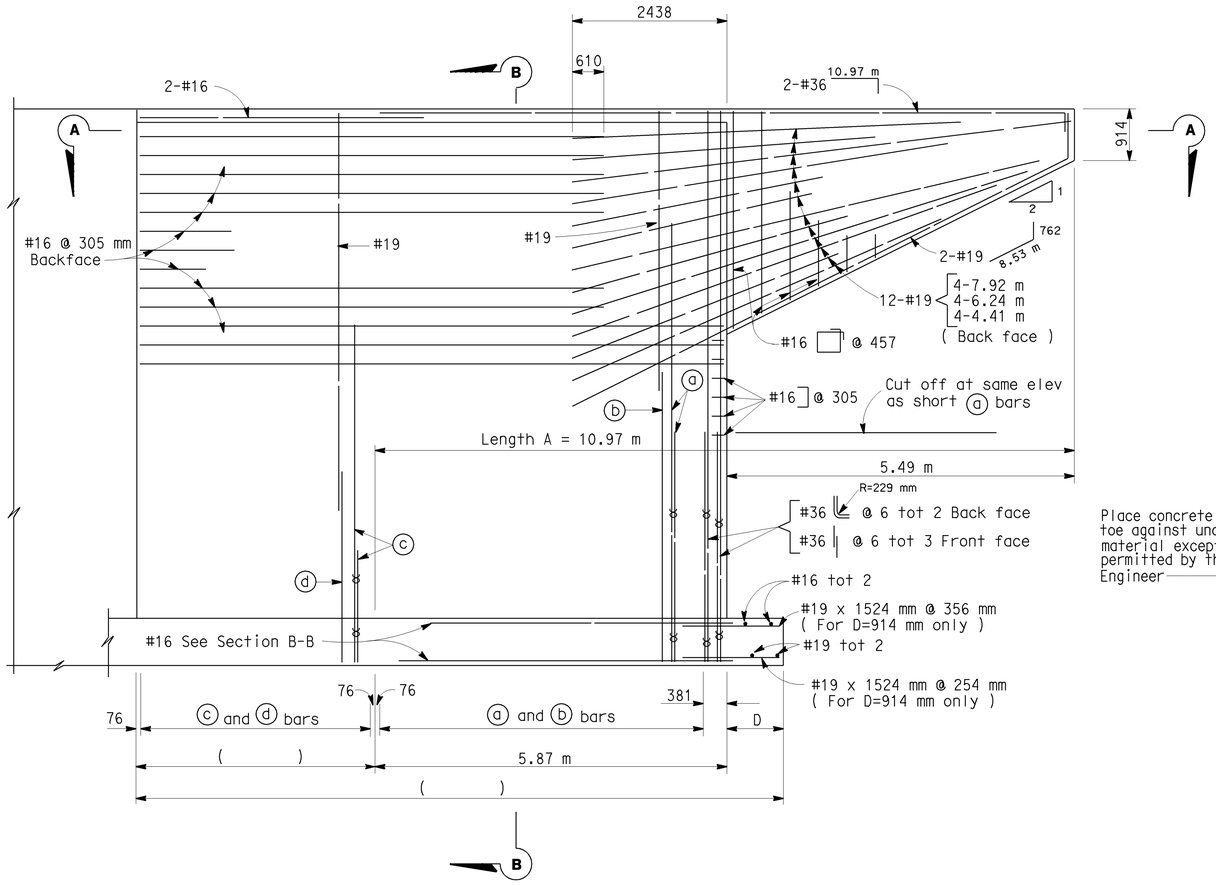

ELEVATION

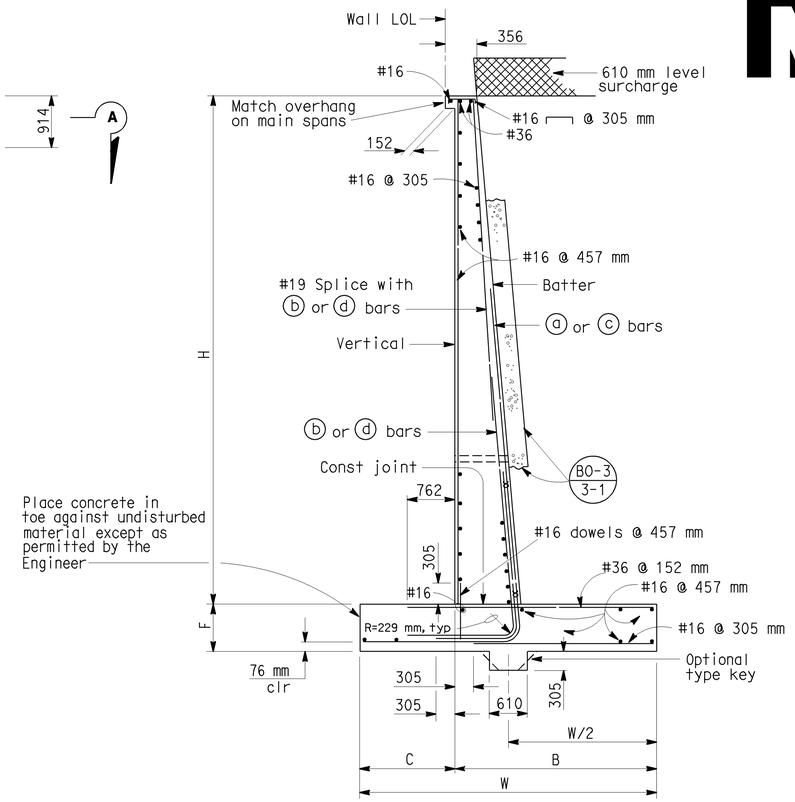

SECTION B-B

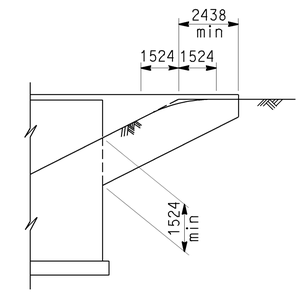

FINISHED GROUND LINE

GENERAL NOTES

Design earth pressure:

Equivalent fluid pressure = 36 pcf max for determination of toe pressure.
27 pcf min for determination of heel pressure.

610 mm Surcharge

Reinforced concrete
fc = 1300 psi
fs = 24000 psi
n = 10

H (m)	6.7			7.3			7.9		8.5		9.1		9.7	
FOOTING PRESSURE	2½ tsf	3 tsf	4 tsf	2½ tsf	3 tsf	4 tsf	3 tsf	4 tsf	3 tsf	4 tsf	3 tsf	4 tsf	3 tsf	4 tsf
B (m)	2.7	2.4	2.4	3.0	2.6	2.6	3.0	2.8	3.2	3.0	3.4	3.3	3.6	3.5
C (m)	1.5	1.3	1.2	1.8	1.5	1.3	1.7	1.4	1.9	1.5	2.1	1.6	2.2	1.7
D (m)	.91	.91	.30	.91	.91	.30	.91	.30	.91	.30	.91	.30	.91	.30
F (m)	.60	.60	.60	.63	.63	.63	.68	.68	.73	.73	.78	.78	.83	.83
W (m)	4.2	3.8	3.6	4.8	4.2	4.0	4.8	4.3	5.1	4.6	5.5	4.9	5.9	5.2
Conc. cu. ft. Length A	1610	1540	1470	1830	1750	1660	1980	1840	2230	2070	2470	2280	2820	2590
Conc. cu. ft. Additional 300 mm	70	67	66	82	78	76	89	86	103	99	115	110	133	127
Reinf. Steel lbs. Length A	9546	9161	8936	10490	10000	9608	11220	10590	12200	11480	13200	12400	14240	13390
Reinf. Steel kg Additional 300 mm	338	327	327	375	364	363	405	400	507	502	559	552	612	607
a Bars 2-#35 @ 300 mm bundle (m)	1-7.3 lg	1-7.1 lg	1-7.0 lg	1-8.2 lg	1-7.9 lg	1-7.7 lg	1-9.1 lg	1-8.8 lg	1-10.0 lg	1-9.6 lg	1-10.9 lg	1-10.4 lg	1-11.8 lg	1-11.3 lg
	1-3.5 lg	1-3.5 lg	1-3.5 lg	1-3.9 lg	1-3.5 lg	1-3.5 lg	1-4.5 lg	1-4.2 lg	1-5.3 lg	14. 9 lg	1-6.0 lg	1-5.6 lg	1-7.0 lg	1-6.4 lg
b Bars (m)	#36 @ .3 x 4.5 lg			#36 @ .3 x 5.1 lg			#36 @ .3 x 5.7 lg		#36 @ .3 x 6.5 lg		#36 @ .3 x 7.3 lg		36 @ .3 x 8.0 lg	
c Bars (m)	#36 @ .3 x 6.0 lg			#36 @ .3 x 7.0 lg			#36 @ .3 x 7.9 lg		#36 @ .3 x 8.8 bundle #36 @ .3 x 3.9		#36 @ .3 x 9.7 bundle #36 @ .3 x 4.7		#36 @ .3 x 10.6 bundle #36 @ .3 x 5.4	
d Bars (m)	#36 @ .3 x 3.8 lg			#36 @ .3 x 4.2 lg			#36 @ .3 x 4.8 lg		#36 @ .3 x 5.0 lg		#36 @ .3 x 5.7 lg		#36 @ .3 x 6.5 lg	
Batter	11/16:12			3/4:12			3/4:12		13/16:12		13/16:12		15/16:12	

Revise as required

Quantities shown are for design purposes only.

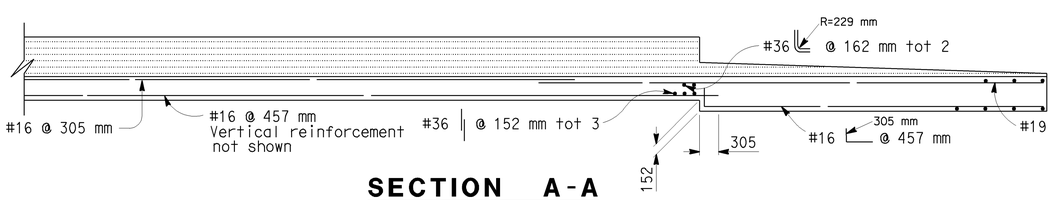

SECTION A-A

NO SCALE

ALL DIMENSIONS ARE IN MILLIMETERS UNLESS OTHERWISE SHOWN

STANDARD DRAWING				
RELEASE DATE 5/27/92	DESIGN	BY	CHECKED	RELEASED BY
FILE NO. xs5-020	DETAILS	BY R. YEE	CHECKED	
	SUBMITTED	BY	DRAWING DATE 12/80	OFFICE CHIEF

STATE OF CALIFORNIA DEPARTMENT OF TRANSPORTATION

DIVISION OF ENGINEERING SERVICES

BRIDGE NO.

KILOMETER POST

WINGWALLS - SPREAD FOOTING

DS OSD 2147A (METRIC) (REV. 2/25/97)

ORIGINAL SCALE IN MILLIMETERS FOR REDUCED PLANS 0 10 20 30 40 50 60 70 80 90 100

CU
EA

DISREGARD PRINTS BEARING EARLIER REVISION DATES

REVISION DATES (PRELIMINARY STAGE ONLY) SHEET OF

USERNAME => jsanchez

xs5-020.dgn

DATE PLOTTED => 16-JAN-2004 TIME PLOTTED => 15:26