DIST.	COUNTY	ROUTE	KILOMETER POST TOTAL PROJECT	SHEET NO.	TOTAL SHEETS

REGISTERED ENGINEER - CIVIL

REGISTERED PROFESSIONAL ENGINEER — No. — Exp. — CIVIL — STATE OF CALIFORNIA

PLANS APPROVAL DATE

Caltrans Metric

The State of California or its officers or agents shall not be responsible for the accuracy or completeness of electronic copies of this plan sheet.

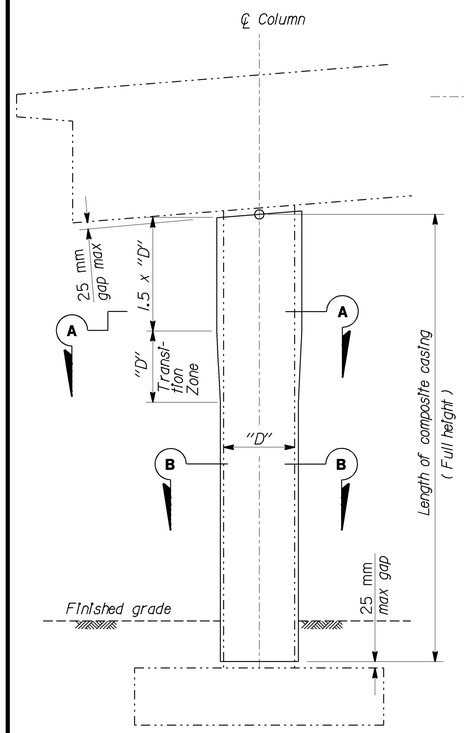

COLUMN RETROFIT

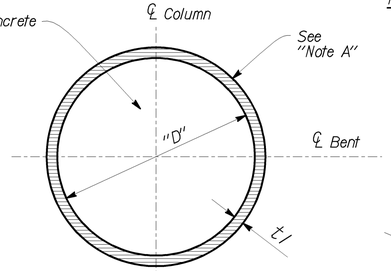

SECTION A-A

Note A:
Epoxy Resin-Glass Composite or
Epoxy Resin-Carbon Composite

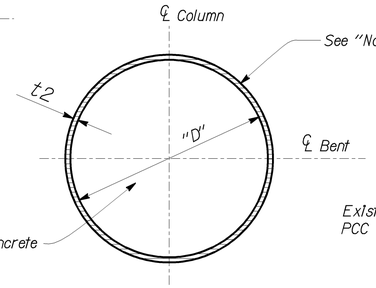

SECTION B-B

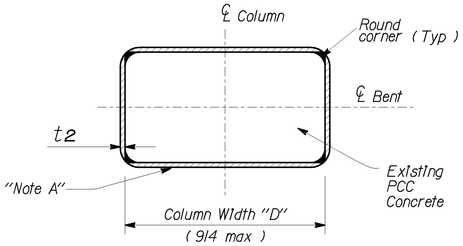

SECTION B-B

Note:
Existing rectangular column concrete column surfaces shall be straight or slightly convex outward at all areas to be covered by jackets; otherwise, the surface shall be filled with epoxy.

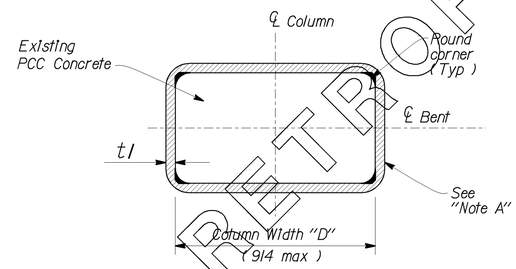

SECTION A-A

E-Glass Notes:

1. Each composite section shall be wrapped using continuous E-glass fabric not less than 610 mm in height. All wraps of continuous E-glass weave shall be terminated a minimum of 305 mm past the starting point of the initial wrap. Subsequent wraps shall be started (butted) at the ending point of the last wrap.
2. All cut edges shall be sealed with epoxy.

Carbon Notes:

1. Pre-preg carbon jacket shall be completely cured by elevated temperature.
2. Pre-preg carbon fiber spools shall contain continuous strands not less than 30.48 m in length.

General Notes:

1. For hexagonal or octagonal columns use composite thickness specified in "Rectangular Column" table.
2. Remove any sharp corners to 38 mm radius minimum.
3. All materials shall be protected from moisture.
4. Drainage opening reinforcement shall be of the same material used for the column casing
5. The casing thickness shall taper evenly the full length of the transition zone.
6. The composite casing shall adhere firmly to all surfaces of the existing column.

LEGEND

-·-·-·-·-	Indicates Existing Structure
———	Indicates New Construction
t1, t2	Denotes Minimum Thickness of Accumulated Dry E-Glass Wraps or completed Carbon Jacket thickness (excluding coatings)

SYSTEM 1
FIBER VOLUME = 35% min

E-GLASS		
ROUND COLUMN		
COLUMN DIA	t1 (min)	t2 (min)
305	5	2.5
610	10	5
914	15	7
1219 max	20	10

E-GLASS		
RECTANGULAR COLUMN		
COLUMN WIDTH	t1 (min)	t2 (min)
305	7.6	3.8
610	15	7.6
914 max	22	11

SYSTEM 2
FIBER VOLUME = 50% min

CARBON		
ROUND COLUMN		
COLUMN DIA	t1 (min)	t2 (min)
305	1.2	1.2
610	2	1.2
914	3	1.5
1219 max	4	2

CARBON		
RECTANGULAR COLUMN		
COLUMN WIDTH	t1 (min)	t2 (min)
305	1.5	1.2
610	3	1.5
914 max	4.5	2.2

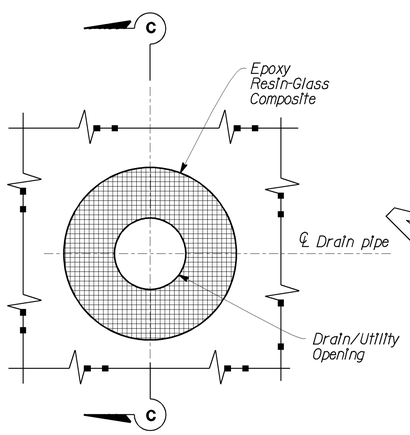

E-GLASS OPENING

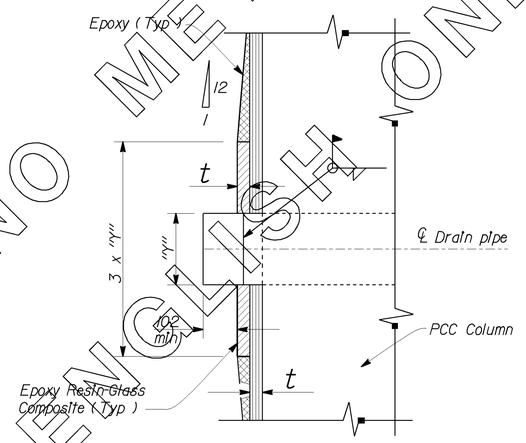

SECTION C-C

NO SCALE

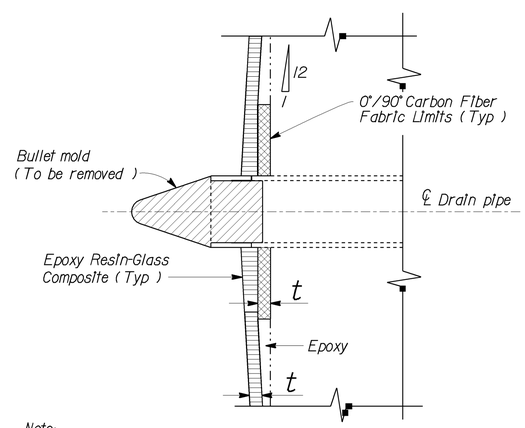

SECTION D-D

Note:
For details not shown see "Section C-C"

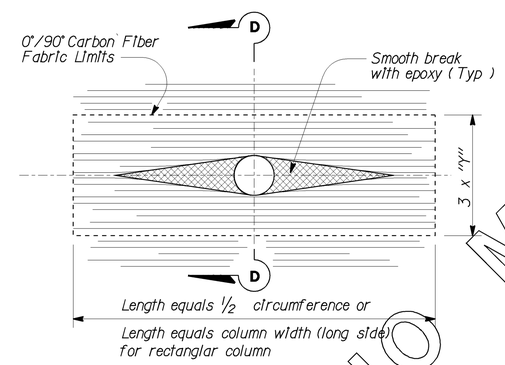

CARBON OPENING

NO SCALE
ALL DIMENSIONS ARE IN MILLIMETERS UNLESS OTHERWISE SHOWN

NO METRIC ENGLISH ONLY FOR RETROFIT NO METRIC

STANDARD DRAWING					
RELEASE DATE 4/25/96	DESIGN	BY PAT HIPLEY	CHECKED RAY ZELINSKI	RELEASED BY	
FILE NO. xs7-210	DETAILS	BY R. YEE	CHECKED PAT HIPLEY		
	SUBMITTED	BY RAY ZELINSKI	DRAWING DATE 4/96	OFFICE CHIEF	

STATE OF CALIFORNIA
DEPARTMENT OF TRANSPORTATION

DIVISION OF ENGINEERING SERVICES

BRIDGE NO.

KILOMETER POST

COMPOSITE COLUMN CASING

DS OSD 2147A (CADD 8/95)

ORIGINAL SCALE IN MILLIMETERS FOR REDUCED PLANS 0 10 20 30 40 50 60 70 80 90 100

CU
EA

DISREGARD PRINTS BEARING EARLIER REVISION DATES →

REVISION DATES (PRELIMINARY STAGE ONLY) SHEET OF

USERNAME => jsanchez

xs7-210.dgn

DATE PLOTTED => 16-JAN-2004 TIME PLOTTED => 15:29