DIST.	COUNTY	ROUTE	KILOMETER POST TOTAL PROJECT	SHEET NO.	TOTAL SHEETS

Caltrans Metric

REGISTERED ENGINEER - CIVIL

PLANS APPROVAL DATE

REGISTERED PROFESSIONAL ENGINEER No. Exp. CIVIL STATE OF CALIFORNIA

The State of California or its officers or agents shall not be responsible for the accuracy or completeness of electronic copies of this plan sheet.

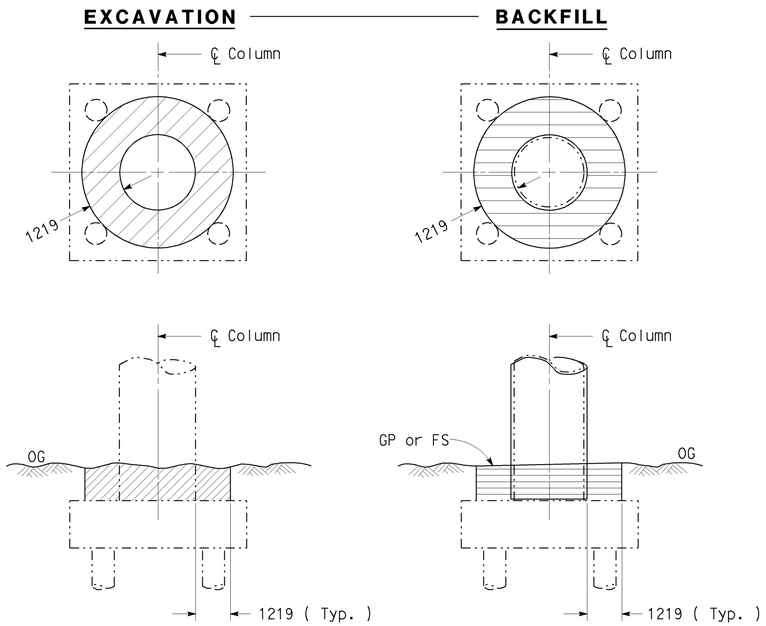

COLUMN CASING ONLY

Note: Circular column shown. Rectangular, square or oval columns similar.

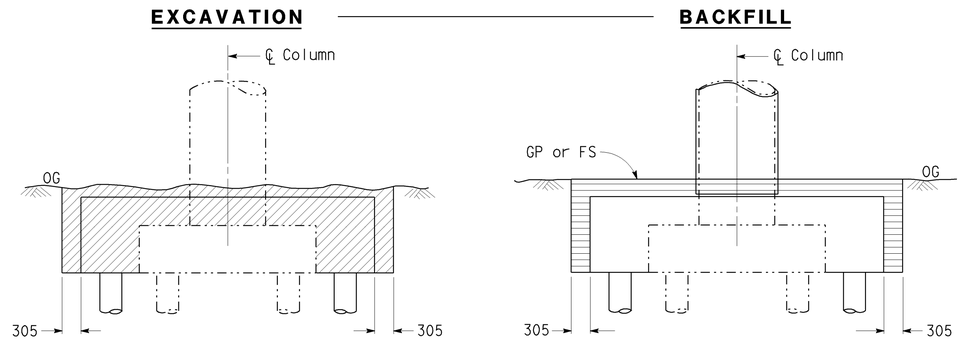

COLUMN CASING & FOOTING RETROFIT

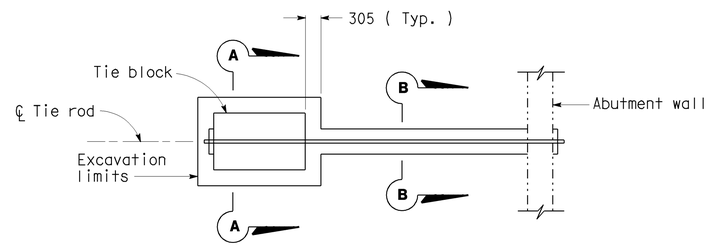

PLAN VIEW - TIE ROD ANCHOR

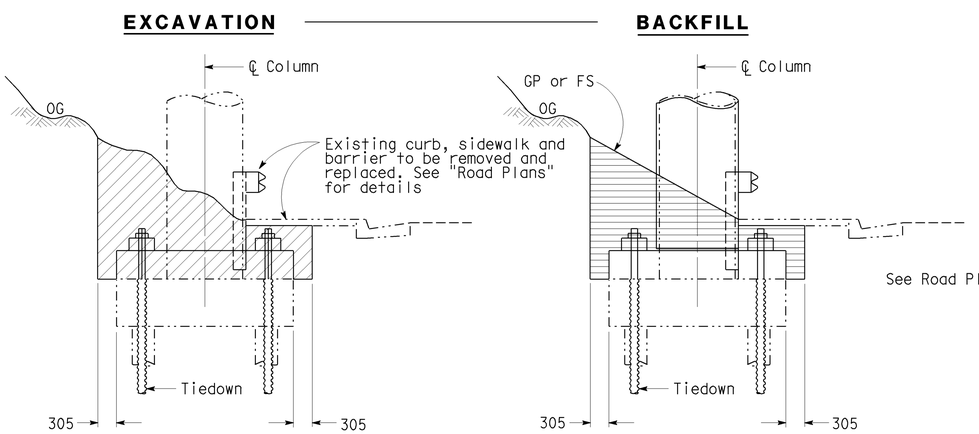

BENT FOOTING TIE-DOWNS

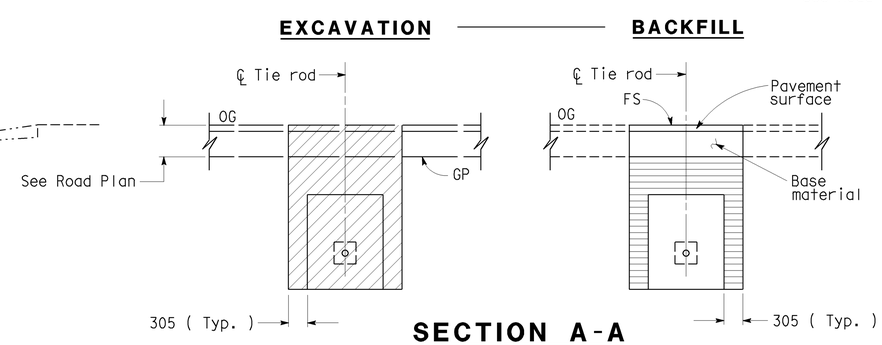

SECTION A-A

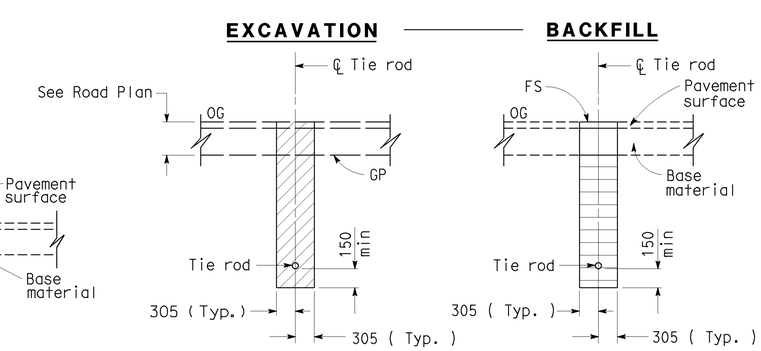

SECTION B-B

LEGEND

- Indicates existing structure
- Indicates new construction
- Indicates structure excavation
- Indicates structure backfill

ABBREVIATIONS

OG	Original ground
FS	Planned finished surface
GP	Planned graded plane

NO SCALE

ALL DIMENSIONS ARE IN MILLIMETERS UNLESS OTHERWISE SHOWN

EARTHQUAKE RETROFIT PROJECT

LIMITS OF PAYMENT FOR EXCAVATION AND BACKFILL LIMITS

STANDARD DRAWING

RELEASE DATE 9/3/92	DESIGN	BY	CHECKED	RELEASED BY
	DETAILS	BY R. YEE	CHECKED	
FILE NO. xs7-310	SUBMITTED	BY R.J. ZELINSKI	DRAWING DATE 4/92	OFFICE CHIEF

STATE OF CALIFORNIA DEPARTMENT OF TRANSPORTATION

DIVISION OF ENGINEERING SERVICES

BRIDGE NO.

KILOMETER POST

DS OSD 2147A (METRIC) (REV. 2/25/97)

ORIGINAL SCALE IN MILLIMETERS FOR REDUCED PLANS 0 10 20 30 40 50 60 70 80 90 100

CU EA

DISREGARD PRINTS BEARING EARLIER REVISION DATES

REVISION DATES (PRELIMINARY STAGE ONLY) SHEET OF

USERNAME => jsanchez

xs7-310.dgn

DATE PLOTTED => 16-JAN-2004 TIME PLOTTED => 15:29