DIST.	COUNTY	ROUTE	KILOMETER POST TOTAL PROJECT	SHEET NO.	TOTAL SHEETS

Caltrans Metric

REGISTERED ENGINEER - CIVIL

PLANS APPROVAL DATE

REGISTERED PROFESSIONAL ENGINEER No. Exp. CIVIL STATE OF CALIFORNIA

The State of California or its officers or agents shall not be responsible for the accuracy or completeness of electronic copies of this plan sheet.

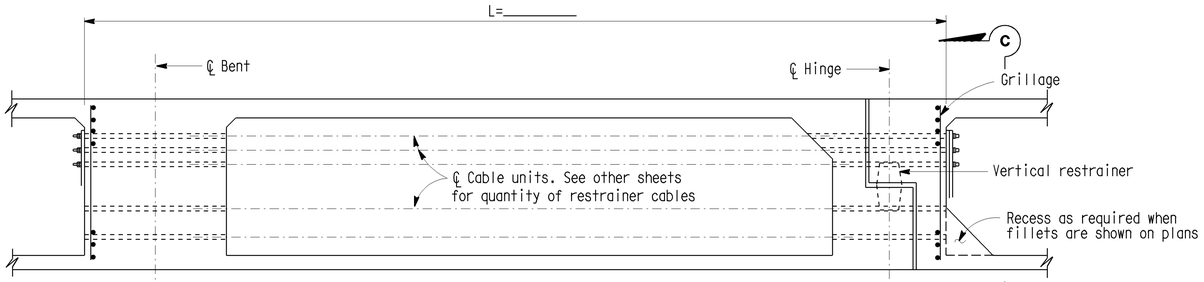

TYPE A

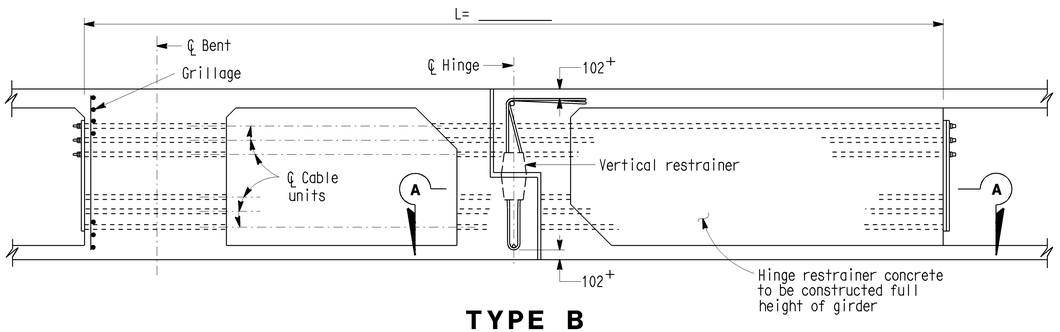

TYPE B

LONGITUDINAL HINGE RESTRAINER

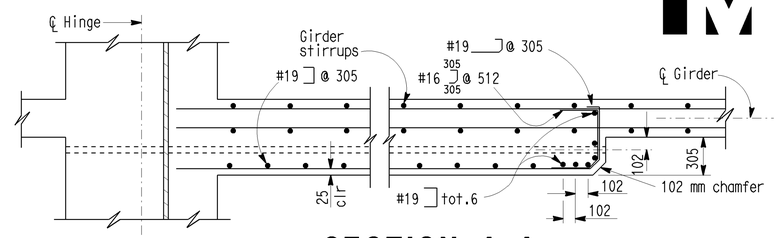

SECTION A-A

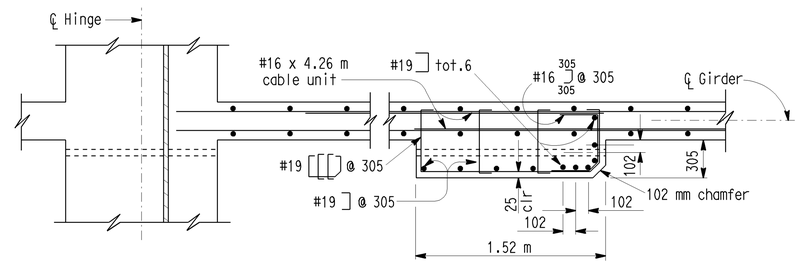

SECTION A-A (ALTERNATIVE)

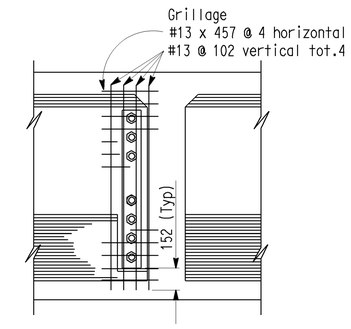

SECTION C-C

Note:Slope to match sloping exterior girders.

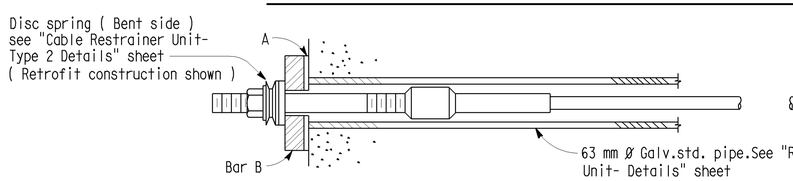

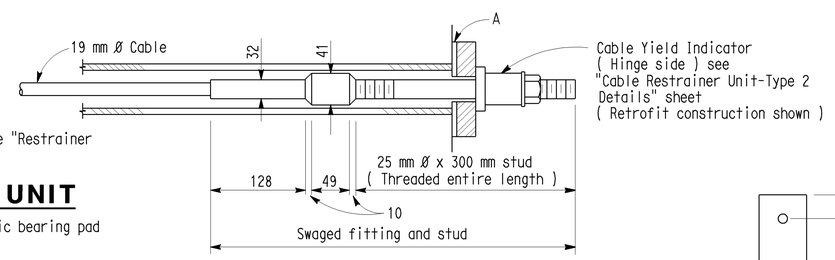

CABLE UNIT

A = 6 mm elastomeric bearing pad

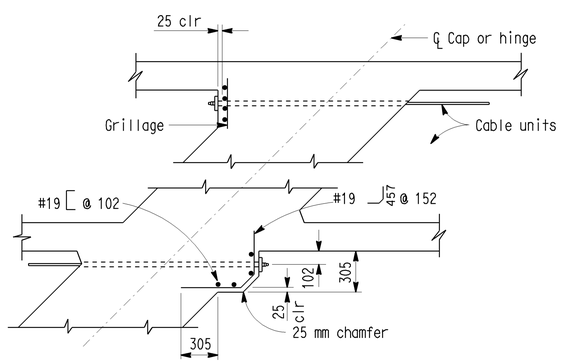

END ANCHORAGE DETAILS AT HINGE OR CAP PART PLAN

NOTES:

Restrainer units to be on tangent alignment.

Anchor nuts shall not be set until 30 days following completion of prestressing for CIP prestressed bridges.

See other sheets for location and number of longitudinal and vertical hinge restrainers, and table of joint openings.

Contractor may install restrainers in horizontal arrangement with approval of the Engineer. The location shall be in the middle 1/3 depth of the structure.

An alternative is to place restrainers in two horizontal layers, equally located above and below the mid structure depth. The number of restrainers in each layer shall not differ by more than one.

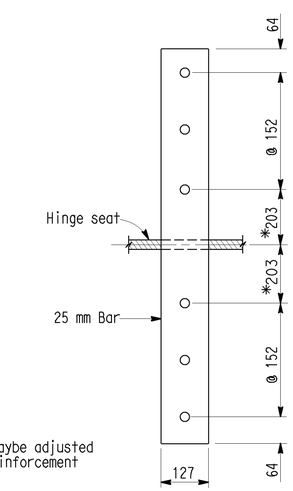

* Dimension maybe adjusted to clear reinforcement

DETAIL - BAR B

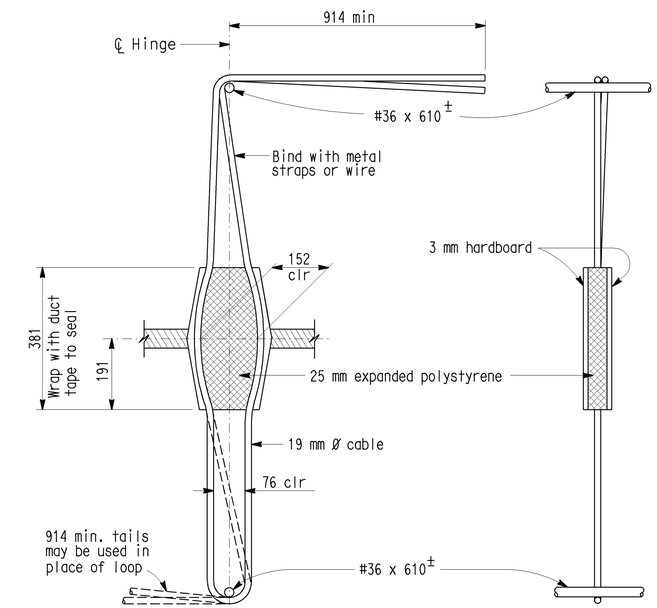

ELEVATION SECTION

VERTICAL RESTRAINER

NO SCALE

ALL DIMENSIONS ARE IN MILLIMETERS UNLESS OTHERWISE SHOWN

STANDARD DRAWING					
RELEASE DATE 4/20/98	DESIGN	BY O.H. DEGENKOLB	CHECKED PAT HIPLEY	RELEASED BY	
FILE NO. xs7-410	DETAILS	BY R. YEE	CHECKED PAT HIPLEY		
	SUBMITTED	BY R.J. ZELINSKI	DRAWING DATE 4/98	OFFICE CHIEF	

STATE OF CALIFORNIA DEPARTMENT OF TRANSPORTATION

DIVISION OF ENGINEERING SERVICES

BRIDGE NO.

KILOMETER POST

CABLE RESTRAINER UNIT - TYPE 2

DS OSD 2147A (METRIC) (REV. 2/25/97)

ORIGINAL SCALE IN MILLIMETERS FOR REDUCED PLANS 0 10 20 30 40 50 60 70 80 90 100

CU EA

DISREGARD PRINTS BEARING EARLIER REVISION DATES

REVISION DATES (PRELIMINARY STAGE ONLY) SHEET OF

USERNAME => jsanchez

xs7-410.dgn

DATE PLOTTED => 16-JAN-2004 TIME PLOTTED => 15:30