DIST.	COUNTY	ROUTE	KILOMETER POST TOTAL PROJECT	SHEET NO.	TOTAL SHEETS

REGISTERED ENGINEER - CIVIL

PLANS APPROVAL DATE

REGISTERED PROFESSIONAL ENGINEER No. Exp. CIVIL STATE OF CALIFORNIA

The State of California or its officers or agents shall not be responsible for the accuracy or completeness of electronic copies of this plan sheet.

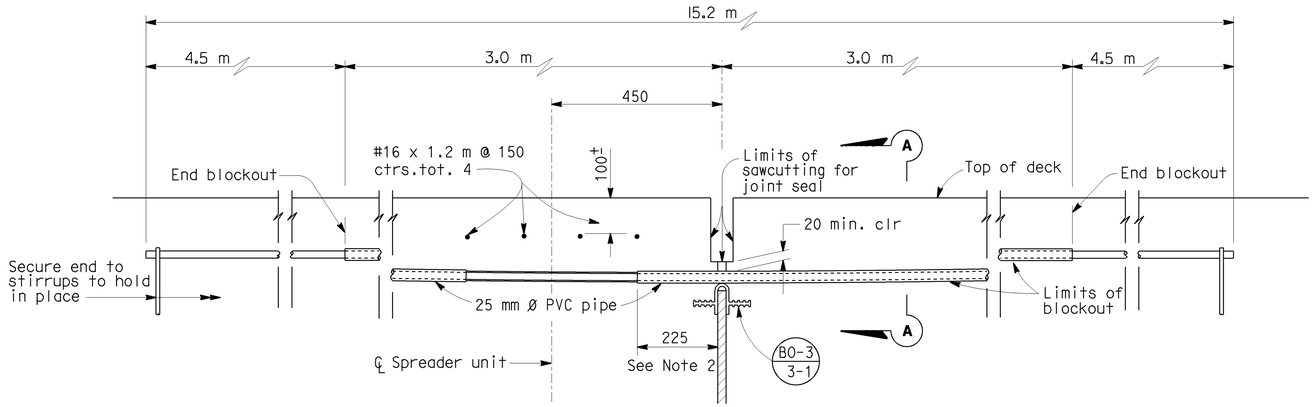

ELEVATION

(Blockout condition shown)

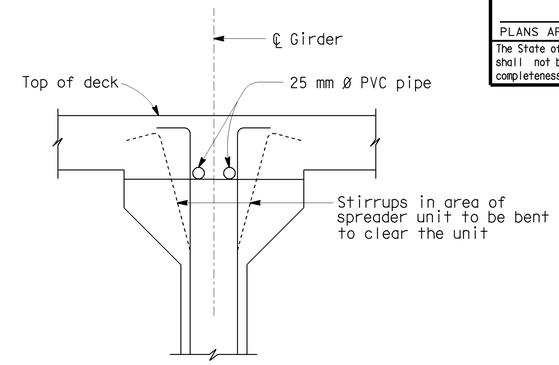

SECTION A-A

(Without blockout)

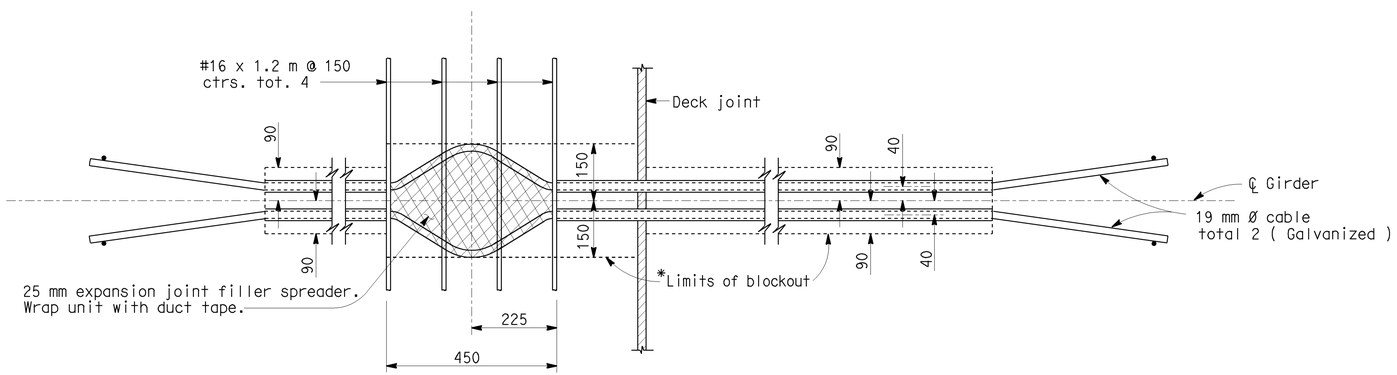

PLAN

(Blockout condition shown)

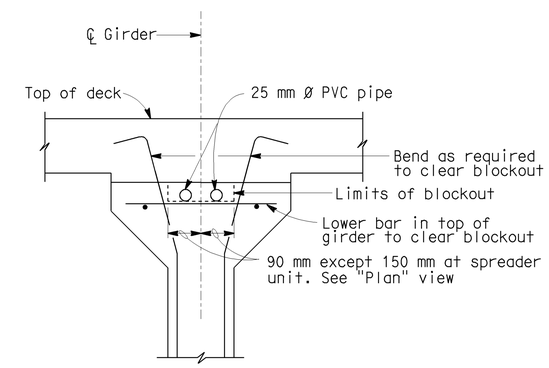

SECTION A-A

(With blackout)

NOTES:

1. Seal ends of PVC pipe.
2. Grease outer surface of PVC.

DESIGN LOAD: 61 k/two - 19 mm Ø cables - WSD
78 k/two - 19 mm Ø cables - LFD

* Blockout required if placing restrainer units on top of precast girder interferes with sawcutting for joint seal.

NO SCALE

ALL DIMENSIONS ARE IN
MILLIMETERS UNLESS OTHERWISE SHOWN

STANDARD DRAWING				
RELEASE DATE 10/14/97	DESIGN BY R. ANDERSON	CHECKED O.H. DEGENKOLB	RELEASED BY	
FILE NO. xs7-510	DETAILS BY W.F. SVOBODA	CHECKED		
	SUBMITTED BY O.H. DEGENKOLB	DRAWING DATE 10/87	OFFICE CHIEF	

STATE OF CALIFORNIA
DEPARTMENT OF TRANSPORTATION

DIVISION OF ENGINEERING SERVICES

BRIDGE NO.

KILOMETER POST

RESTRAINER UNIT TYPE 5-PRECAST GIRDERS

DS OSD 2147A (METRIC) (REV. 2/25/97)

ORIGINAL SCALE IN MILLIMETERS FOR REDUCED PLANS 0 10 20 30 40 50 60 70 80 90 100

CU
EA

DISREGARD PRINTS BEARING EARLIER REVISION DATES

REVISION DATES (PRELIMINARY STAGE ONLY) SHEET OF

USERNAME => jsanchez

xs7-510.dgn

DATE PLOTTED => 16-JAN-2004 TIME PLOTTED => 15:31