DIST.	COUNTY	ROUTE	KILOMETER POST TOTAL PROJECT	SHEET NO.	TOTAL SHEETS

Caltrans Metric

REGISTERED ENGINEER - CIVIL

PLANS APPROVAL DATE

REGISTERED PROFESSIONAL ENGINEER No. Exp. CIVIL STATE OF CALIFORNIA

The State of California or its officers or agents shall not be responsible for the accuracy or completeness of electronic copies of this plan sheet.

METRIC NOT APPLICABLE
METRIC NOT APPLICABLE
METRIC NOT APPLICABLE
RETROFIT IN IMPERIAL

Notes:

1. Restrainer units to be placed normal to hinge except as shown.
2. Do not block vents in bottom slab. Provide 100 mm x 100 mm ± passage to nearest edge of bolster.

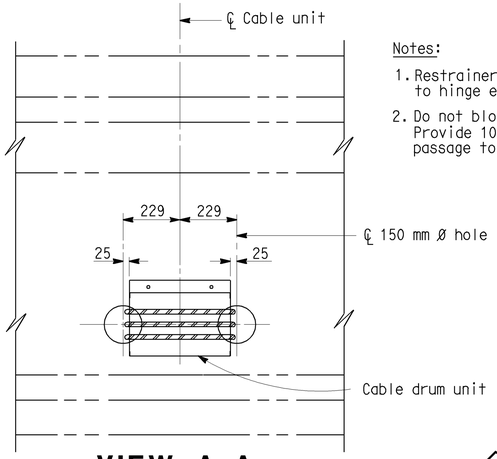

VIEW A-A

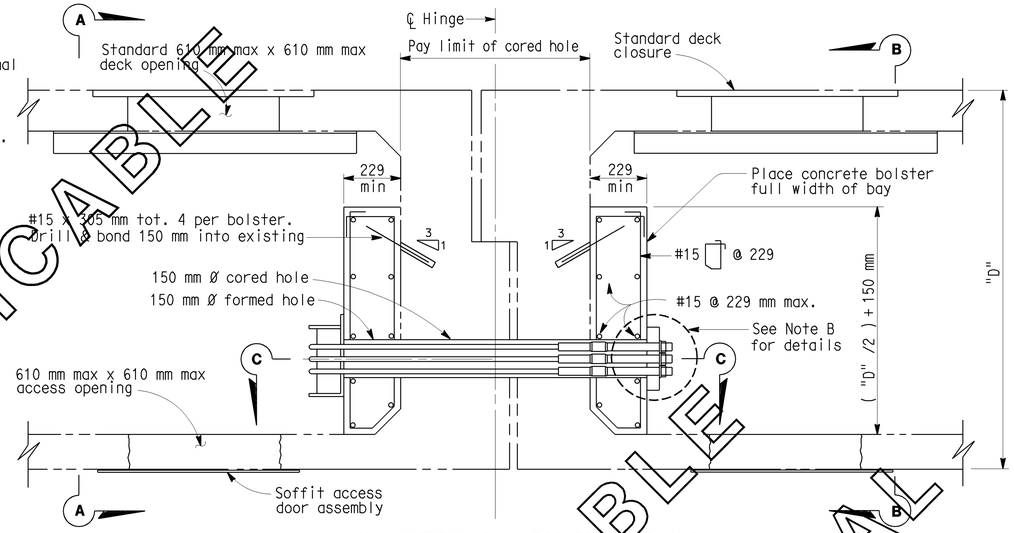

SECTION THRU HINGE

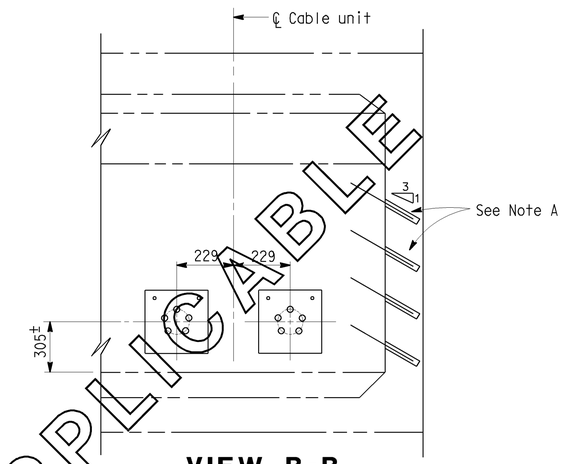

VIEW B-B

Note A: #20 x 305 mm tot. 8 per bolster. Drill and bond 150 mm into existing girder. Locate 150 mm from face of diaphragm.

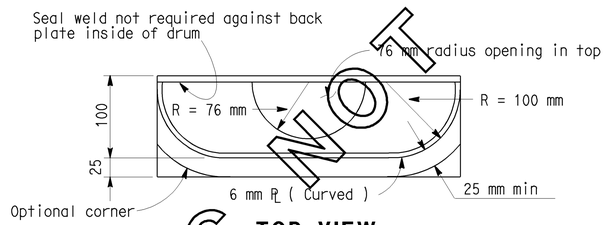

TOP VIEW

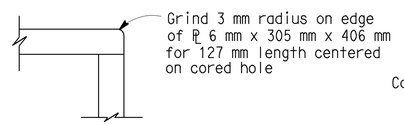

SECTION D-D

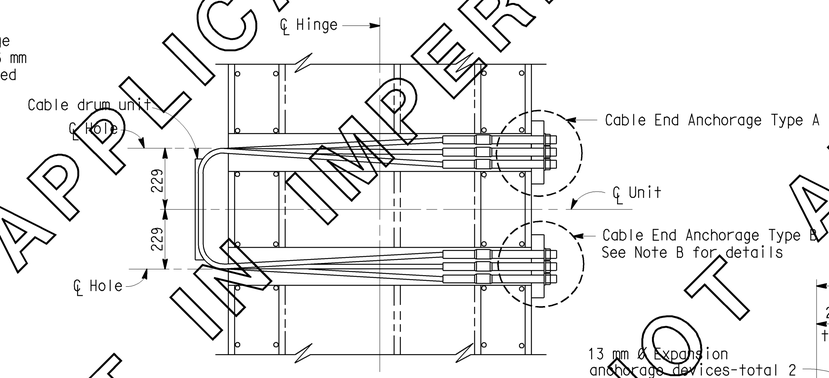

SECTION C-C

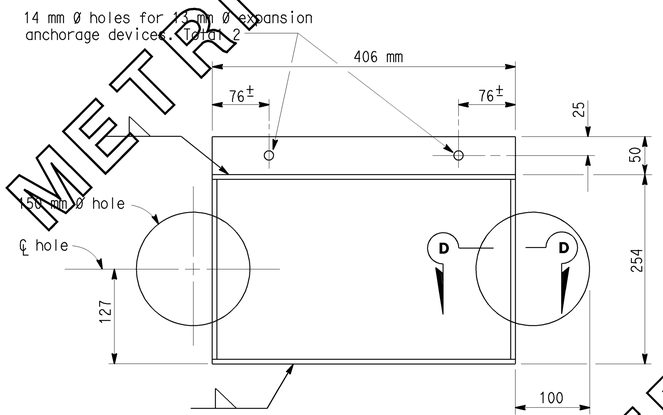

FRONT VIEW

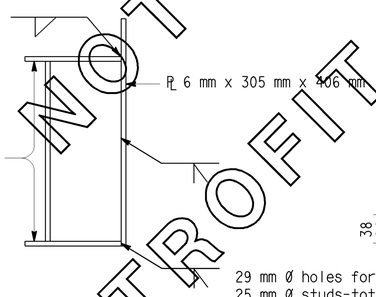

END VIEW

CABLE DRUM UNIT

Note: Fill unit with concrete before installation. Place cable drum unit on side of hinge nearest bent.

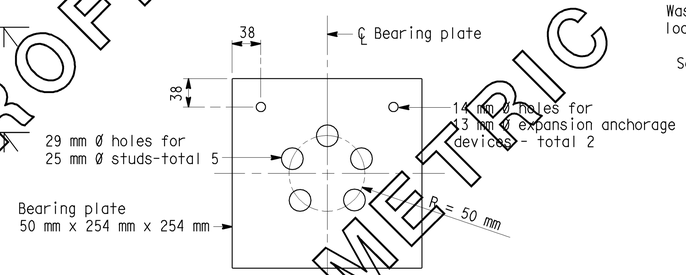

BEARING PLATE

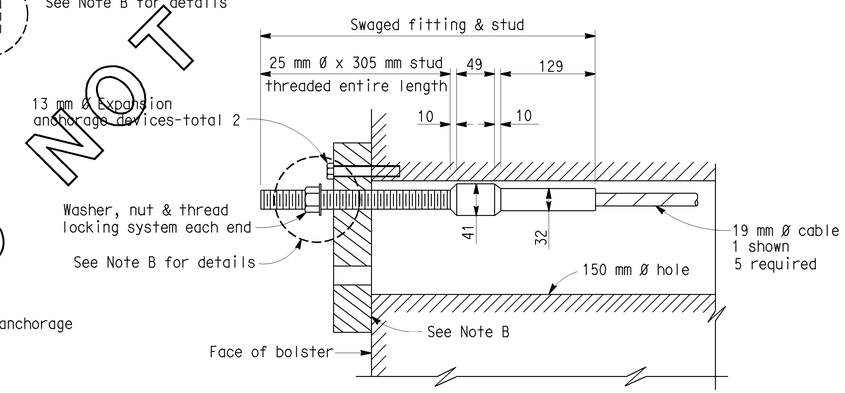

CABLE END ANCHORAGE

Note B: For cable installation procedure and anchorage details see Type C-1 Restrainer Details sheet

ALL DIMENSIONS ARE IN MILLIMETERS UNLESS OTHERWISE SHOWN

STANDARD DRAWING					
RELEASE DATE 4/6/93	DESIGN	BY O.H. DEGENKOLB	CHECKED PAT HIPLEY	RELEASED BY	
FILE NO. xs7-610	DETAILS	BY R. YEE	CHECKED PAT HIPLEY		
	SUBMITTED	BY RAY ZELINSKI	DRAWING DATE 5/90	OFFICE CHIEF	

STATE OF CALIFORNIA DEPARTMENT OF TRANSPORTATION

DIVISION OF ENGINEERING SERVICES

BRIDGE NO.

KILOMETER POST

HINGE RESTRAINER COMPLETED CONSTRUCTION - TYPE CI

DS OSD 2147A (METRIC) (REV. 2/25/97)

ORIGINAL SCALE IN MILLIMETERS FOR REDUCED PLANS 0 10 20 30 40 50 60 70 80 90 100

CU EA

DISREGARD PRINTS BEARING EARLIER REVISION DATES

REVISION DATES (PRELIMINARY STAGE ONLY) SHEET OF

USERNAME => jsanchez

xs7-610.dgn

DATE PLOTTED => 16-JAN-2004 TIME PLOTTED => 15:31