DIST.	COUNTY	ROUTE	KILOMETER POST TOTAL PROJECT	SHEET NO.	TOTAL SHEETS

Caltrans Metric

REGISTERED ENGINEER - CIVIL

PLANS APPROVAL DATE

REGISTERED PROFESSIONAL ENGINEER No. Exp. CIVIL STATE OF CALIFORNIA

The State of California or its officers or agents shall not be responsible for the accuracy or completeness of electronic copies of this plan sheet.

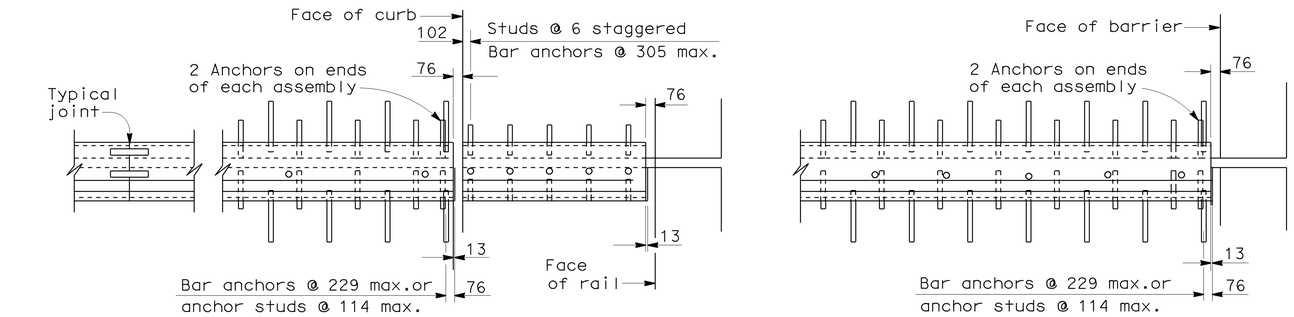

PART PLAN EXPANSION ARMOR NORMAL TO GIRDER

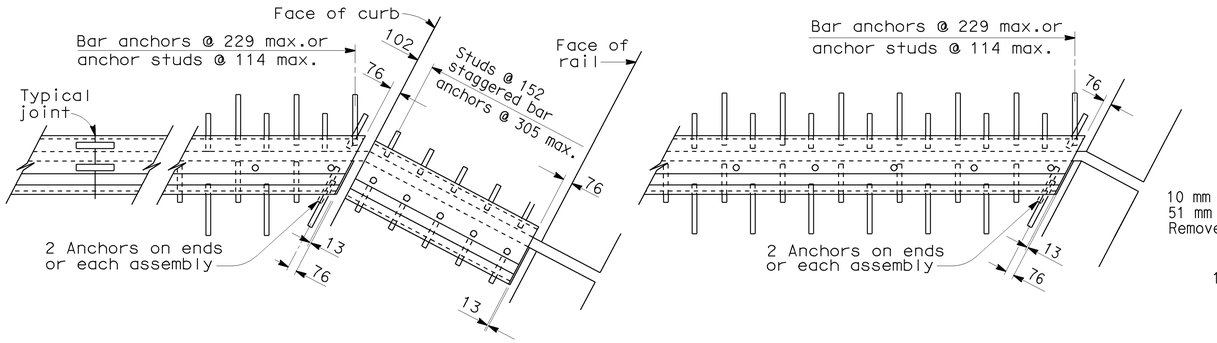

PART PLAN EXPANSION ARMOR SKEWED TO GIRDER

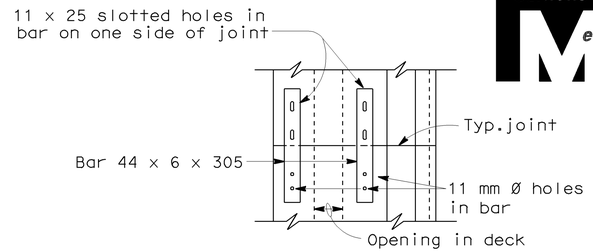

PLAN

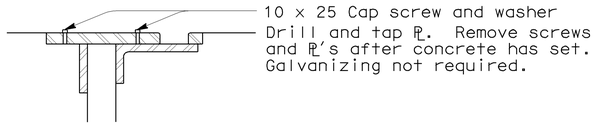

SECTION

TYPICAL JOINT DETAILS

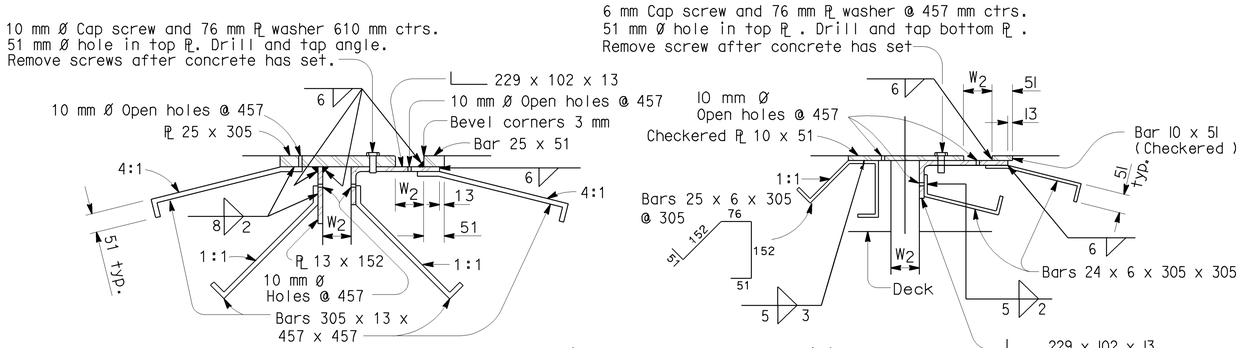

W_2 = 25 mm at maximum temperature normal to joint
Exact width to be determined by the Engineer.

TYPE A TYPE B

DETAIL WITH BAR ANCHORS

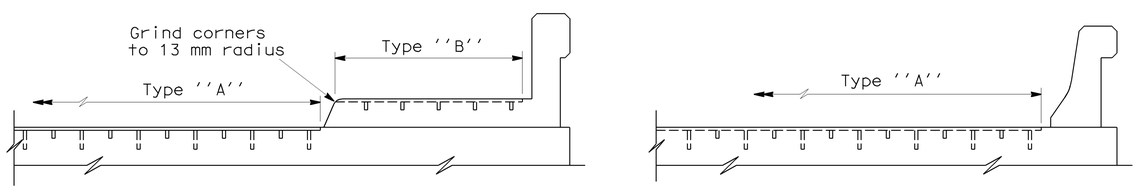

TYPICAL SECTION

TYPE A TYPE B

DETAIL WITH ANCHOR STUDS

For details not shown,see "Detail with Bar Anchors".

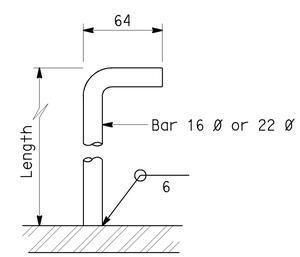

ANCHOR STUD

Note: Alternate types of anchor studs may be permitted subject to the approval of the Engineer.

NOTES:

Full penetration butt welds may be substituted for the fillet welds on all anchor studs.

Expansion armor assembly to be galvanized after fabrication except as noted.

Expansion armor assembly to be fabricated in 4.2 m max. lengths.

Use joint at crown of roadway,at any change in transverse slope of deck and at edge of lane.

Quantities shown are for design purpose only.

UNIT TYPE	ASSEMBLY WT kg/m	
	Bar Anchor	Stud Anchor
A	135	152
B	67	67

NO SCALE

ALL DIMENSIONS ARE IN MILLIMETERS UNLESS OTHERWISE SHOWN

STANDARD DRAWING					
RELEASE DATE 3/26/97	DESIGN	BY H. HERR	CHECKED C.W. PURKISS	RELEASED BY	
	DETAILS	BY R. YEE	CHECKED H. HERR		
FILE NO. xs8-040	SUBMITTED	BY C.W. PURKISS	DRAWING DATE 12/77	OFFICE CHIEF	

STATE OF CALIFORNIA DEPARTMENT OF TRANSPORTATION

DIVISION OF ENGINEERING SERVICES

BRIDGE NO.

KILOMETER POST

JOINT ARMOR - EXPANSION DETAIL

MAXIMUM MOVEMENT RATING = 102 mm

DS OSD 2147A (METRIC) (REV. 2/25/97)

ORIGINAL SCALE IN MILLIMETERS FOR REDUCED PLANS 0 10 20 30 40 50 60 70 80 90 100

CU EA

DISREGARD PRINTS BEARING EARLIER REVISION DATES

REVISION DATES (PRELIMINARY STAGE ONLY) SHEET OF

USERNAME => jsanchez

xs8-040.dgn

DATE PLOTTED => 16-JAN-2004 TIME PLOTTED => 15:33