1	0.0	1485.4	2970.9	4456.3	5941.7	6381.2	6123.7	5375.9	4197.1	2405.1	0.0
SHEAR	277.7	277.7	277.7	277.7	277.7	82.2	-163.7	-335.0	-392.2	-449.6	-184.5

IDENT PSEXA BRIDGE ANALYSIS AND DESIGN AUG. 17, 1988 PAGE 20

***** COMBINATION OF P AND/OR HS TRUCKS *****

DEAD LOAD MOMENT PLUS POSITIVE LIVE LOAD MOMENT ENVELOPES FOR CAP DESIGN

MEM NO	LEFT	.1 PT.	.2 PT.	.3 PT.	.4 PT.	.5 PT.	.6 PT.	.7 PT.	.8 PT.	.9 PT.	RIGHT
1	0.0	7640.4	15087.7	22329.2	27214.1	29438.5	28751.7	25233.0	19681.1	11327.4	0.0

IDENT PSEXA BRIDGE ANALYSIS AND DESIGN AUG. 17, 1988 PAGE 21

***** COMBINATION OF P AND/OR HS TRUCKS *****

DEAD LOAD MOMENT PLUS POSITIVE LIVE LOAD MOMENT ENVELOPES FOR CAP DESIGN * FACTORED *

MEM NO	LEFT	.1 PT.	.2 PT.	.3 PT.	.4 PT.	.5 PT.	.6 PT.	.7 PT.	.8 PT.	.9 PT.	RIGHT
1	0.0	9932.6	19614.0	29028.0	35378.4	38270.0	37377.2	32802.9	25585.4	14725.7	0.0

IDENT PSEXA BRIDGE ANALYSIS AND DESIGN AUG. 17, 1988 PAGE 22

***** COMBINATION OF P AND/OR HS TRUCKS *****

LIVE LOAD SHEAR ENVELOPES AND ASSOCIATED MOMENT FOR CAP DESIGN

MEM NO	LEFT	.1 PT.	.2 PT.	.3 PT.	.4 PT.	.5 PT.	.6 PT.	.7 PT.	.8 PT.	.9 PT.	RIGHT
1	327.5	327.5	327.5	327.5	277.7	220.4	-212.7	-334.9	-392.2	-449.5	-466.7
MOMENT	0.0	1751.9	3503.7	5255.6	5941.7	5894.4	4551.2	5375.9	4197.1	2405.1	0.0

IDENT PSEXA BRIDGE ANALYSIS AND DESIGN AUG. 17, 1988 PAGE 23

***** COMBINATION OF P AND/OR HS TRUCKS *****

DEAD LOAD SHEAR PLUS LIVE LOAD SHEAR ENVELOPES FOR CAP DESIGN

MEM NO	LEFT	.1 PT.	.2 PT.	.3 PT.	.4 PT.	.5 PT.	.6 PT.	.7 PT.	.8 PT.	.9 PT.	RIGHT
1	1496.0	1459.9	1423.8	1382.4	770.5	161.1	-314.0	-988.3	-1597.7	-1697.1	-2262.6

IDENT PSEXA BRIDGE ANALYSIS AND DESIGN AUG. 17, 1988 PAGE 24

***** COMBINATION OF P AND/OR HS TRUCKS *****

DEAD LOAD SHEAR PLUS LIVE LOAD SHEAR ENVELOPES FOR CAP DESIGN * FACTORED *

MEM NO	LEFT	.1 PT.	.2 PT.	.3 PT.	.4 PT.	.5 PT.	.6 PT.	.7 PT.	.8 PT.	.9 PT.	RIGHT
1	1944.8	1897.8	1850.9	1797.1	1001.7	209.5	-408.1	-1284.8	-2077.0	-2206.2	-2941.3

IDENT PSEXA BRIDGE ANALYSIS AND DESIGN AUG. 17, 1988 PAGE 25

****

MAXIMUM POSITIVE CAP MOMENT ENVELOPES DUE TO FACTORED DL + LL

****

MEM NO	LEFT	.1 PT.	.2 PT.	.3 PT.	.4 PT.	.5 PT.	.6 PT.	.7 PT.	.8 PT.	.9 PT.	RIGHT
1	0.0	10464.1	20677.0	30622.6	36677.7	39798.1	38848.9	34019.9	26535.5	15277.8	0.0

IDENT PSEXA BRIDGE ANALYSIS AND DESIGN AUG. 17, 1988 PAGE 26

****

MAXIMUM NEGATIVE CAP MOMENT ENVELOPES DUE TO FACTORED DL + LL

****

MEM NO	LEFT	.1 PT.	.2 PT.	.3 PT.	.4 PT.	.5 PT.	.6 PT.	.7 PT.	.8 PT.	.9 PT.	RIGHT

1	0.0	0.0	0.0	0.0	0.0	0.0	0.0	0.0	0.0	0.0	0.0

****

MAXIMUM CAP SHEAR ENVELOPES DUE TO FACTORED DL + LL

****

MEM NO	LEFT	.1 PT.	.2 PT.	.3 PT.	.4 PT.	.5 PT.	.6 PT.	.7 PT.	.8 PT.	.9 PT.	RIGHT
1	1979.4	1932.4	1885.5	1831.8	1008.3	209.5	-408.1	-1284.8	-2081.1	-2309.4	-3054.2

****** THE LIVE LOAD COULD BE EITHER A 1.15P AND/OR HS TRUCKS, OR A GROUP OF STANDARD HS TRUCKS. ******

RESULTS FOR COLUMN DESIGN

***** STANDARD HS TRUCKS *****

MAXIMUM TRANSVERSE MO.

MEM NO	ASSOC. AXIAL FORCE * N *	ASSOCIATED LONGITUDINAL MO. BOT * MX *	TOP	MAXIMUM TRANSVERSE MO. BOT * MY *	TOP
2	212.0	0.0	0.0	0.0	0.0
3	322.5	0.0	0.0	0.0	0.0

RESULTS FOR COLUMN DESIGN

***** STANDARD HS TRUCKS *****

MAXIMUM LONGITUDINAL MO.

MEM NO	ASSOC. AXIAL FORCE * N *	MAXIMUM LONGITUDINAL MO. BOT * MX *	TOP	ASSOCIATED TRANSVERSE MO. BOT * MY *	TOP
2	0.0	0.0	0.0	0.0	0.0
3	0.0	0.0	0.0	0.0	0.0

RESULTS FOR COLUMN DESIGN

***** STANDARD HS TRUCKS *****

MAXIMUM AXIAL FORCE

MEM NO	MAX. AXIAL FORCE * N *	ASSOCIATED LONGITUDINAL MO. BOT * MX *	TOP	ASSOCIATED TRANSVERSE MO. BOT * MY *	TOP
2	212.0	0.0	0.0	0.0	0.0
3	331.4	0.0	0.0	0.0	0.0

RESULTS FOR COLUMN DESIGN

***** COMBINATION OF P AND/OR HS TRUCKS *****

MAXIMUM TRANSVERSE MO.

MEM NO	ASSOC. AXIAL FORCE	ASSOCIATED LONGITUDINAL MO. BOT	TOP	MAXIMUM TRANSVERSE MO. BOT	TOP

	* N *	* MX *		* MY *	
2	327.5	0.0	0.0	0.0	0.0
3	449.5	0.0	0.0	0.0	0.0

RESULTS FOR COLUMN DESIGN

***** COMBINATION OF P AND/OR HS TRUCKS *****

MAXIMUM LONGITUDINAL MO.

MEM NO	ASSOC. AXIAL FORCE * N *	MAXIMUM LONGITUDINAL MO. BOT * MX *	TOP	ASSOCIATED TRANSVERSE MO. BOT * MY *	TOP
2	0.0	0.0	0.0	0.0	0.0
2	0.0	0.0	0.0	0.0	0.0

RESULTS FOR COLUMN DESIGN

***** COMBINATION OF P AND/OR HS TRUCKS *****

MAXIMUM AXIAL FORCE

MEM NO	MAX. AXIAL FORCE * N *	ASSOCIATED LONGITUDINAL MO. BOT * MX *	TOP	ASSOCIATED TRANSVERSE MO. BOT * MY *	TOP
2	327.5	0.0	0.0	0.0	0.0
3	466.7	0.0	0.0	0.0	0.0

RESULTS FOR COLUMN DESIGN

******* MOMENTS AND AXIAL FORCES DUE TO TEMPERATURE CHANGE AND WIND LOADS *******

	TEMPERATURE			WIND LOADS (GROUP 2)			WIND LOADS (GROUP 3)			WIND ON L LOAD WL		WIND ON L LOAD LF	
MEM NO	AXIAL FORCE	MOMENT BOT	MOMENT TOP	AXIAL FORCE	MOMENT BOT	MOMENT TOP	AXIAL FORCE	MOMENT BOT	MOMENT TOP	MOMENT BOT	MOMENT TOP	MOMENT BOT	MOMENT TOP
2	0.0	0.0	0.0	0.0	0.0	0.0	0.0	0.0	0.0	-225.0	0.0	-225.0	0.0
3	0.0	0.0	0.0	0.0	0.0	0.0	0.0	0.0	0.0	-225.0	0.0	-225.0	0.0

THE POINT OF NO MOVEMENT CAUSED BY TEMPERATURE CHANGE IS LOCATED 0.0 FEET FROM THE LEFT END OF MEMBER NO. 1.

THE WL AND LF MOMENTS ARE BASED ON A DEFAULT CONCENTRATED LOAD OF 10 KIPS APPLIED AT THE TOP OF COLUMNS HORIZONTALLY.

****

* SUMMARY OF COLUMN LOADS FOR YIELD PROGRAM INPUT *

****

* MEMBER NO. 2 UPPER END :

			LIVE LOAD + IMP.								EQ	
	DEAD LOAD	PS	MY MAXI	MX MAXI	N MAXI	WD	WL	LF	CF	TEMP	TRAN	LONG
MY	0.	0.	0.	0.	0.	0.	0.	0.	0.	0.	0.	
MX			0.	0.	0.							
N	1169.	0.	212.	0.	212.	0.	0.	0.	0.	0.	0.	

PMY	0.	0.	0.
PMX	0.	0.	0.
PN	327.	0.	327.

* MEMBER NO. 2 LOWER END :

			LIVE LOAD + IMP.								EQ	
	DEAD LOAD	PS	MY MAXI	MX MAXI	N MAXI	WD	WL	LF	CF	TEMP	TRAN	LONG
MY	-0.	0.	0.	0.	0.	0.	0.	0.	0.	0.	0.	
MX			0.	0.	0.							
N	1505.	0.	212.	0.	212.	0.	0.	0.	0.	0.	0.	
PMY			0.	0.	0.							
PMX			0.	0.	0.							
PN			327.	0.	327.							

****

* SUMMARY OF COLUMN LOADS FOR YIELD PROGRAM INPUT *

****

* MEMBER NO. 3 UPPER END :

			LIVE LOAD + IMP.								EQ	
	DEAD LOAD	PS	MY MAXI	MX MAXI	N MAXI	WD	WL	LF	CF	TEMP	TRAN	LONG
MY	0.	0.	0.	0.	0.	0.	0.	0.	0.	0.	0.	
MX			0.	0.	0.							

N	1796.	0.	323.	0.	331.	0.	0.	0.	0.	0.	.
PMY			0.	0.	0.						
PMX			0.	0.	0.						
PN			450.	0.	467.						

* MEMBER NO. 3 LOWER END :

			LIVE LOAD + IMP.								EQ	
	DEAD LOAD	PS	MY MAXI	MX MAXI	N MAXI	WD	WL	LF	CF	TEMP	TRAN	LONG
MY	-0.	0.	0.	0.	0.	0.	0.	0.	0.	0.	0.	
MX			0.	0.	0.							
N	2132.	0.	323.	0.	331.	0.	0.	0.	0.	0.	0.	
PMY			0.	0.	0.							
PMX			0.	0.	0.							
PN			450.	0.	467.							

```
****  PLEASE NOTE THAT ALL OTHER REQUIRED INFORMATION NOT PRINTED IN THIS SUMMARY MUST BE PROVIDED BY THE USER.  ****
IDENT  PSEXA                    BRIDGE ANALYSIS AND DESIGN          AUG. 17, 1988                PAGE  37
INPUT PRESTRESSED DATA
TRIAL  1     FRAME 1     PATH 1
LINE  MEM
 NO.  NO.       LLT       LLP       LRT          YLT         YLP         YRT        U         K
        1       0.0       0.50      0.0          3.75        6.83        3.75       0.25  0.00020
XLT(FT) =    0.0    XRT(FT) =    0.0     STEEL STRESS(KSI) = 270.    JACKING % = .75    JACKING ENDS = L
ANCHOR SET(IN); LEFT = 0.375  RIGHT = 0.0       CONC. STRENGTH(PSI) = 4000.    ALLOW. TENSION(PSI) = -379.
P-JACK(KIPS) =        0.     SHORTENING PERCENT= 100     TOTAL LOSSES(KSI) = 20
LO-LAX = YES                 RELATIVE HUMIDITY =  70 %

*****************************************************************************
****** THE ANSWERS ARE UNCHECKED AND THE USER IS RESPONSIBLE FOR CHECKING THEM. ******
*****************************************************************************
IDENT  PSEXA                    BRIDGE ANALYSIS AND DESIGN          AUG. 17, 1988                PAGE  38
CABLE PATH OFFSETS
TRIAL  1     FRAME 1     PATH 1
```

```
MEMBER    LEFT     .1 PT    .2 PT    .3 PT    .4 PT    .5 PT    .6 PT    .7 PT    .8 PT    .9 PT    RIGHT
 1       3.75     4.86     5.72     6.34     6.71     6.83     6.71     6.34     5.72     4.86     3.75
IDENT  PSEXA                    BRIDGE ANALYSIS AND DESIGN          AUG. 17, 1988                PAGE  39
CABLE PATH ECCENTRICITIES
TRIAL  1    FRAME 1    PATH 1
MEMBER      LEFT     .1 PT    .2 PT    .3 PT    .4 PT    .5 PT    .6 PT    .7 PT    .8 PT    .9 PT    RIGHT
 1        0.0      1.109    1.971    2.738    3.108    3.231    3.108    2.738    2.123    1.260    0.000
IDENT  PSEXA                    BRIDGE ANALYSIS AND DESIGN          AUG. 17, 1988                PAGE  40
FORCE COEFFICIENTS AFTER ANCHOR SET AND LONG TERM LOSSES
TRIAL  1    FRAME 1    PATH 1
MEMBER    LEFT     .1PT     .2 PT    .3 PT    .4 PT    .5 PT    .6 PT    .7 PT    .8 PT    .9 PT    RIGHT
 1       0.708    0.720    0.733    0.745    0.757    0.769    0.778    0.790    0.801    0.797    0.786
THE POINT OF NO MOVEMENT IS IN SPAN  1,  53.50 FEET FROM THE LEFT END OF THE SPAN
THE LEFT ANCHOR SET LENGTH IS     44.7
THE RIGHT ANCHOR SET LENGTH IS     0.0
THE FORCE COEF. AT THE LEFT END IS   0.708
THE FORCE COEF. AT THE RIGHT END IS  0.786



*** THE FORCE COEFFICIENT AT THE POINT OF NO MOVEMENT BEFORE ANCHOR SET IS  0.884      *****

*** THE TOTAL LENGTH OF THIS CABLE PATH INCLUDING 4 FEET FOR JACKING IS    57.50 FEET. *****
IDENT  PSEXA                    BRIDGE ANALYSIS AND DESIGN          AUG. 17, 1988                PAGE  41
SECONDARY MOMENTS
TRIAL  1    FRAME 1    PATH 1
                                FEM"S DUE TO SECONDARY EFFECTS BEFORE BALANCING

                              MEMBER            LEFT END        RIGHT END
                                1                  0.0             0.0
                                DEM"S DUE TO SECONDARY EFFECTS

                              MEMBER            LEFT END        RIGHT END
                                1                  0.0             0.0
IDENT  PSEXA                    BRIDGE ANALYSIS AND DESIGN          AUG. 17, 1988                PAGE  42
P/S MOMENT COEF.
TRIAL   1 FRAME 1  PATH 1
                             *** SIDESWAY NOT CONSIDERED. DEAD LOAD WAS NOT SWAYED. ***
                             ADJUSTED FOR LOSSES & SECONDARY MOMENTS BUT NO SHORTENING
MEM
 NO     LEFT     .1 PT    .2 PT    .3 PT    .4 PT    .5 PT    .6 PT    .7 PT    .8 PT    .9 PT    RIGHT
  1     0.0     -0.7988  -1.4443  -2.0399  -2.3527  -2.4844  -2.4179  -2.1622  -1.7003  -1.0040  -0.0000
***** WARNING - THIS FRAME WILL NOT SHORTEN SO COEFF. WILL NOT BE ADJUSTED FOR SHORTENING. *****
IDENT  PSEXA                    BRIDGE ANALYSIS AND DESIGN          AUG. 17, 1988                PAGE  43
TRIAL  1  FRAME 1  PATH 1
HORIZONTAL MEMBER STRESSES PRESTRESS ONLY BOTTOM FIBRE
MEM
 NO     LEFT     .1 PT    .2 PT    .3 PT    .4 PT    .5 PT    .6 PT    .7 PT    .8 PT    .9 PT    RIGHT
  1      708.    1360.    1889.    1838.    2032.    2119.    2088.    1948.    1686.    1274.     786.
HORIZONTAL MEMBER STRESSES PRESTRESS ONLY TOP FIBRE
MEM
```

```
 NO      LEFT     .1 PT    .2 PT    .3 PT    .4 PT    .5 PT    .6 PT    .7 PT    .8 PT    .9 PT    RIGHT
  1       708.      81.    -423.    -466.    -625.    -686.    -642.    -494.    -233.     140.      786.
IDENT  PSEXA                     BRIDGE ANALYSIS AND DESIGN          AUG. 17, 1988                PAGE  44
TRIAL  1  FRAME 1  PATH 1
HORIZONTAL MEMBER STRESSES  DL + P/S  FOR BOTTOM FIBRE
MEM
 NO      LEFT     .1 PT    .2 PT    .3 PT    .4 PT    .5 PT    .6 PT    .7 PT    .8 PT    .9 PT    RIGHT
  1       708.     600.     393.     219.     105.      30.      38.     149.     284.     465.      786.
HORIZONTAL MEMBER STRESSES  DL + P/S  FOR TOP FIBRE
MEM
 NO      LEFT     .1 PT    .2 PT    .3 PT    .4 PT    .5 PT    .6 PT    .7 PT    .8 PT    .9 PT    RIGHT
  1       708.     841.    1073.    1028.    1153.    1241.    1249.    1166.    1061.     886.      786.
IDENT  PSEXA                     BRIDGE ANALYSIS AND DESIGN          AUG. 17, 1988                PAGE  45
TRIAL  1  FRAME 1  PATH 1
HORIZONTAL MEMBER STRESSES DL + ADDED DL + P/S FOR BOTTOM FIBRE
MEM
 NO      LEFT     .1 PT    .2 PT    .3 PT    .4 PT    .5 PT    .6 PT    .7 PT    .8 PT    .9 PT    RIGHT
  1       708.     600.     393.     219.     105.      30.      38.     149.     284.     465.      786.
HORIZONTAL MEMBER STRESSES DL + ADDED DL + P/S FOR TOP FIBRE
MEM
 NO      LEFT     .1 PT    .2 PT    .3 PT    .4 PT    .5 PT    .6 PT    .7 PT    .8 PT    .9 PT    RIGHT
  1       708.     841.    1073.    1028.    1153.    1241.    1249.    1166.    1061.     886.      786.
IDENT  PSEXA                     BRIDGE ANALYSIS AND DESIGN          AUG. 17, 1988                PAGE  46
TRIAL  1  FRAME 1  PATH 1
HORIZONTAL MEMBER STRESSES DL + ADDED DL + MAX POS LL + I + P/S  BOTTOM FIBRE
MEM
 NO      LEFT     .1 PT    .2 PT    .3 PT    .4 PT    .5 PT    .6 PT    .7 PT    .8 PT    .9 PT    RIGHT
  1       708.     460.     113.     -90.    -272.    -379.    -356.    -194.      16.     312.      786.
HORIZONTAL MEMBER STRESSES DL + ADDED DL + MAX POS LL + I + P/S  TOP FIBRE
MEM
 NO      LEFT     .1 PT    .2 PT    .3 PT    .4 PT    .5 PT    .6 PT    .7 PT    .8 PT    .9 PT    RIGHT
  1       708.     981.    1353.    1312.    1500.    1619.    1612.    1482.    1307.    1027.      786.
IDENT  PSEXA                     BRIDGE ANALYSIS AND DESIGN          AUG. 17, 1988                PAGE  47
TRIAL  1  FRAME 1  PATH 1
HORIZONTAL MEMBER STRESSES DL + ADDED DL + MAX NEG LL + I + P/S  BOTTOM FIBRE
MEM
 NO      LEFT     .1 PT    .2 PT    .3 PT    .4 PT    .5 PT    .6 PT    .7 PT    .8 PT    .9 PT    RIGHT
  1       708.     600.     393.     219.     105.      30.      38.     149.     284.     465.      786.
HORIZONTAL MEMBER STRESSES  DL + ADDED DL + MAX NEG LL + I + P/S  FOR TOP FIBRE
MEM
 NO      LEFT     .1 PT    .2 PT    .3 PT    .4 PT    .5 PT    .6 PT    .7 PT    .8 PT    .9 PT    RIGHT
  1       708.     841.    1073.    1028.    1153.    1241.    1249.    1166.    1061.     886.      786.


**** MIN PJACK =    6483. KIPS  CONC STRENGTH @ 28 DAYS =    4048. PSI  @ STRESSING =    2271. PSI  ****

IDENT  PSEXA                     BRIDGE ANALYSIS AND DESIGN          AUG. 17, 1988                PAGE  48
TRIAL  1    FRAME 1    PATH 1
HORIZONTAL MEMBER MOMENTS DUE TO P/S
MEM
 NO      LEFT     .1 PT    .2 PT    .3 PT    .4 PT    .5 PT    .6 PT    .7 PT    .8 PT    .9 PT    RIGHT
  1         0.   -5179.   -9364.  -13225.  -15253.  -16107.  -15676.  -14018.  -11023.   -6509.       -0.
VERTICAL MEMBER MOMENTS DUE TO P/S
MEM
```

NO	LEFT	.1 PT	.2 PT	.3 PT	.4 PT	.5 PT	.6 PT	.7 PT	.8 PT	.9 PT	RIGHT
2	0.	0.	0.	0.	0.	0.	0.	0.	0.	0.	0.
3	0.	0.	0.	0.	0.	0.	0.	0.	0.	0.	0.

IDENT PSEXA BRIDGE ANALYSIS AND DESIGN AUG. 17, 1988 PAGE 49
TRIAL 1 FRAME 1 PATH 1
TANGENTIAL ROTATIONS - RADIANS - CLOCKWISE POSITIVE

SPAN	LT. END	RT. END	SPAN	LT. END	RT. END	SPAN	LT. END	RT. END
1	-0.001944	0.001932	2	0.0	0.0	3	0.0	0.0

HORIZONTAL MEMBER DEFLECTIONS IN FEET AT 1/ 4 POINTS FROM LEFT END - DOWNWARD POSITIVE

MEMBER 1	E= 3600.	0.0	-0.090	-0.126	-0.091	0.0

VERTICAL MEMBER DEFLECTIONS IN FEET AT 1/ 4 POINTS FROM LEFT END.

MEMBER 2	E= 3250.	0.0	0.0	0.0	0.0	0.0
MEMBER 3	E= 3250.	0.0	0.0	0.0	0.0	0.0

*** MEMBER DEFLECTIONS BASED ON THE DEFAULT CONCRETE STRENGTH OF 4.0 KSI FOR SUPER AND 3.25 KSI FOR SUB. *****

*** MEMBER DEFLECTIONS HAVE BEEN MULTIPLIED BY A CONCRETE CREEP FACTOR OF 4.0 . ******
IDENT PSEXA BRIDGE ANALYSIS AND DESIGN AUG. 17, 1988 PAGE 50

AASHTO LONG TERM PRESTRESS LOSSES

TOTAL LOSS = CRS + CRC + ES + SH.

TRIAL NO. 1

MEM NO	LEFT	.1 PT.	.2 PT.	.3 PT.	.4 PT.	.5 PT.	.6 PT.	.7 PT.	.8 PT.	.9 PT.	RIGHT
1	21.90	21.75	20.66	17.82	16.42	15.46	15.70	17.27	18.98	20.47	23.01

WARNING : THE LONG TERM PRESTRESS LOSSES SHOULD BE EXAMINED CAREFULLY. IF THE CALCULATED LOSSES DOES NOT AGREE WITH THE DEFAULT/INPUT LOSSES MORE THAN 15 PERCENT AT THE CRITICAL POINT, REDESIGN SHOULD BE CONSIDERED.

THE MEAN VALUE OF THE LONG TERM CALCULATED PRESTRESS LOSSES IS 19.04 KSI.
IDENT PSEXA BRIDGE ANALYSIS AND DESIGN AUG. 17, 1988 PAGE 51

SUMMARY OF HORIZONTAL MEMBER DEFLECTIONS FOR PRESTRESSED GIRDER

TRIAL NO. 1

HORIZONTAL MEMBER DEFLECTIONS IN FEET AT 1/ 4 POINTS FROM LEFT END - DOWNWARD POSITIVE

MEMBER 1	E= 3600.	0.0	-0.090	-0.126	-0.091	0.0

ULTIMATE RESISTING MOMENT OF PRESTRESSED MEMBER

TRIAL NO. 1 MEMBER NO. : 1

LOCATION :

	MOM. TYPE	FACTORED APL. MOM (K-FT)	ULTIMATE MOM. (K-FT)	FSU @ CGS MIN. (KSI)	FSU @ CGS MAX. (KSI)	NEUTRAL AXIS (IN)	MILD STEEL (SQ.IN)	COMBINED STEEL INDEX
0.0 PT.		0.0	0.0	0.0	0.0	0.0	0.0	0.0
0.1 PT.	POS	10464.1	20590.1	253.84	253.84	18.65	0.0	0.455
		< THE EXACT NEUTRAL AXIS CAN NOT BE FOUND, THE APPROXIMATE "NA" WAS USED. >						
0.2 PT.	POS	20677.0	28543.6	257.38	257.38	18.71	0.0	0.392
		< THE EXACT NEUTRAL AXIS CAN NOT BE FOUND, THE APPROXIMATE "NA" WAS USED. >						
0.3 PT.	POS	30622.6	47305.6	262.13	262.13	13.63	0.0	0.158
		< THE EXACT NEUTRAL AXIS CAN NOT BE FOUND, THE APPROXIMATE "NA" WAS USED. >						
0.4 PT.	POS	36677.7	50340.1	262.58	262.58	13.64	0.0	0.150
		< THE EXACT NEUTRAL AXIS CAN NOT BE FOUND, THE APPROXIMATE "NA" WAS USED. >						
0.5 PT.	POS	39798.1	51352.3	262.74	262.74	13.65	0.0	0.147
		< THE EXACT NEUTRAL AXIS CAN NOT BE FOUND, THE APPROXIMATE "NA" WAS USED. >						
0.6 PT.	POS	38848.9	50351.0	262.64	262.64	13.64	0.0	0.150
		< THE EXACT NEUTRAL AXIS CAN NOT BE FOUND, THE APPROXIMATE "NA" WAS USED. >						
0.7 PT.	POS	34019.9	47331.1	262.28	262.28	13.64	0.0	0.158
		< THE EXACT NEUTRAL AXIS CAN NOT BE FOUND, THE APPROXIMATE "NA" WAS USED. >						
0.8 PT.	POS	26535.5	42296.3	261.51	261.51	13.62	0.0	0.175
		< THE EXACT NEUTRAL AXIS CAN NOT BE FOUND, THE APPROXIMATE "NA" WAS USED. >						
0.9 PT.	POS	15277.8	35227.8	259.91	259.91	13.58	0.0	0.205
		< THE EXACT NEUTRAL AXIS CAN NOT BE FOUND, THE APPROXIMATE "NA" WAS USED. >						
1.0 PT.		0.0	0.0	0.0	0.0	0.0	0.0	0.0

*** THE ULTIMATE MOMENT IS BASED ON THE 4.25 KSI CONCRETE STRENGTH. ***

SHEAR MODIFICATION FACTOR -- GIRDER / BENT CAP

MEM NO	LEFT	.1 PT	.2 PT	.3 PT	.4 PT	.5 PT	.6 PT	.7 PT	.8 PT	.9 PT	RIGHT
1	1.0000	1.0000	1.0000	1.0000	1.0000	1.0000	1.0000	1.0000	1.0000	1.0000	1.0000

IDENT PSEXA BRIDGE ANALYSIS AND DESIGN AUG. 17, 1988 PAGE 54

AASHTO STIRRUP DESIGN FOR SHEAR -- (INT & EXT GIRDER / BENT CAP)

MEMBER NO. : 1

	LEFT	.1 PT.	.2 PT.	.3 PT.	.4 PT.	.5 PT.	.6 PT.	.7 PT.	.8 PT.	.9 PT.	RIGHT
APPLIED SHEAR FORCE VU :	2199.	2147.	2095.	2035.	1120.	233.	453.	1428.	2312.	2566.	3394.
CONC. SH RESISTANCE VC :	3289.	2835.	1893.	1689.	891.	654.	642.	1050.	2001.	3182.	3521.
WIDTH OF GIRD WEB (IN) :	72.	72.	72.	72.	72.	72.	72.	72.	72.	72.	72.
STIRRUP DESIGN SHR. VS :	0.	0.	202.	347.	229.	0.	0.	377.	312.	0.	0.

FINAL STIRRUP DESIGN :

NO.	DESCRIPTION	SHEAR RESISTANCE AT 10TH POINT FOR DIFFERENT STIRRUP SPACING										
#5	SPACING INCH	12.	12.	24.	15.	24.	24.	24.	12.	15.	12.	12.
	RESIST. KIPS	223.	223.	223.	377.	250.	254.	250.	471.	357.	223.	223.
	AREA REQ"D/CAP	1.24	1.24	1.24	1.24	1.24	1.24	1.24	1.24	1.24	1.24	1.24
	MAX SP ALLOWED	12.00	12.00	24.00	16.32	24.00	24.00	24.00	14.99	17.19	12.00	12.00
#6	SPACING INCH	12.	12.	24.	21.	24.	24.	24.	21.	24.	12.	12.
	RESIST. KIPS	317.	317.	317.	382.	354.	361.	354.	382.	317.	317.	317.
	AREA REQ"D/CAP	1.76	1.76	1.76	1.76	1.76	1.76	1.76	1.76	1.76	1.76	1.76
	MAX SP ALLOWED	12.00	12.00	24.00	23.16	24.00	24.00	24.00	21.28	24.00	12.00	12.00
#7	SPACING INCH	12.	12.	24.	24.	24.	24.	24.	24.	24.	12.	12.
	RESIST. KIPS	432.	432.	432.	456.	483.	492.	483.	456.	432.	432.	432.
	AREA REQ"D/CAP	2.40	2.40	2.40	2.40	2.40	2.40	2.40	2.40	2.40	2.40	2.40
	MAX SP ALLOWED	12.00	12.00	24.00	24.00	24.00	24.00	24.00	24.00	24.00	12.00	12.00

*** NO GIRDER FLARE REQUIRED FOR BOTH ENDS OF THIS MEMBER. ***

```
****************************************
**  SUMMARY OF INPUT CARDS PROCESSED.  **
****************************************
              NO. OF A  CARDS  :   3
              NO. OF C  CARDS  :  15
              NO. OF N  CARDS  :   1
              NO. OF P  CARDS  :   1
              NO. OF G  CARDS  :   1
      ----------------------------------
          TOTAL NO. OF CARDS  =   21
```

State of California | Business, Transportation and Housing Agency

MEMORANDUM

To: ALL BRIDGE COMPUTER MANUAL HOLDERS

Date: August 18, 1988

File: 895

From: **DEPARTMENT OF TRANSPORTATION**
DIVISION OF STRUCTURES

Subject: PRESTRESSED OUTRIGGER BENT EXAMPLE

The attached Bent Analysis Example (3-3.1) should be added to Section 3-3 of your BRIDGE COMPUTER MANUAL. The example is not an actual structure and is only intended to illustrate the following four features of the BENT Program:

1. A new, simplified method of describing the Bent Cross Section using Form C rather than Form B. New Part Codes have been added:

   27 Cap Depth (Required for Load Factor Design & Prestressed Concrete Design)
   28 Top Slab
   29 Girder
   30 Bottom Slab

2. The use of current Part Codes 1 through 4 with Part Code 27 to describe a rectangular section for Load Factor or Prestress Design.

3. Coding and analysis of a Prestressed Outrigger Bent using the new Form C input to describe the Bent Cross Sections.

4. Modeling of abrupt changes in the cross section of a member.

Mickey Horn

Mickey Horn
Computer Services Engineer
Division of Structures

Attachment

/cf

BENT EXAMPLE : PRESTRESSED OUTRIGGER BENT

GIVEN: The following prestressed, outrigger bent for a multi-span prestressed box girder structure.

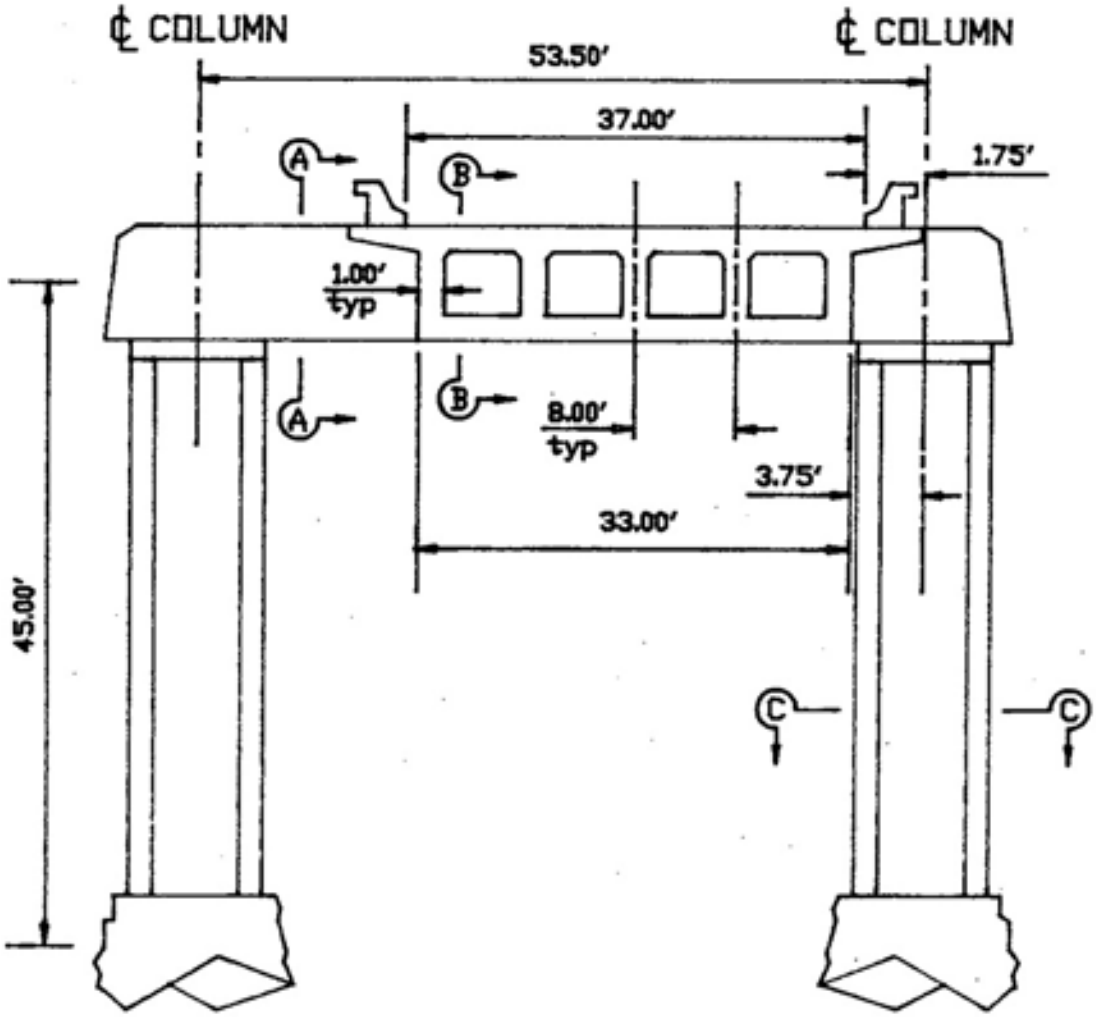

OUTRIGGER BENT - PRESTRESSED

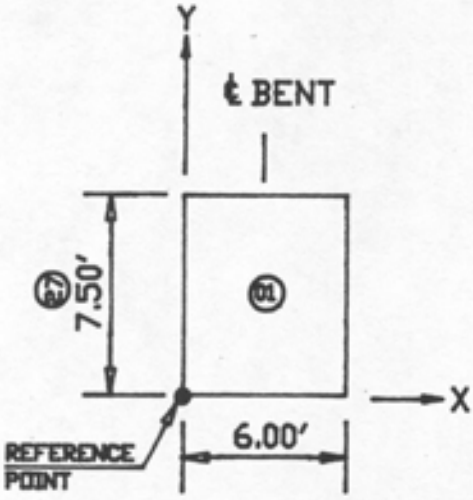

SECTION A-A

(MEMBER 1)

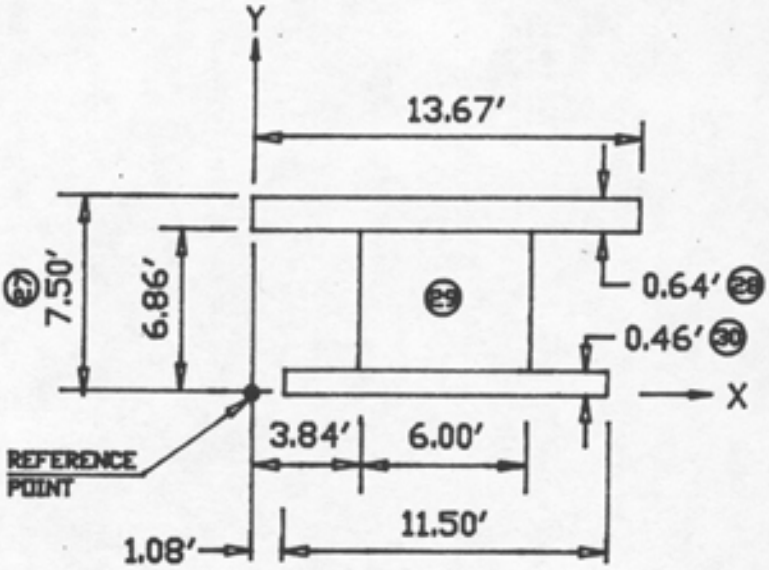

SECTION B-B

(MEMBER 1)

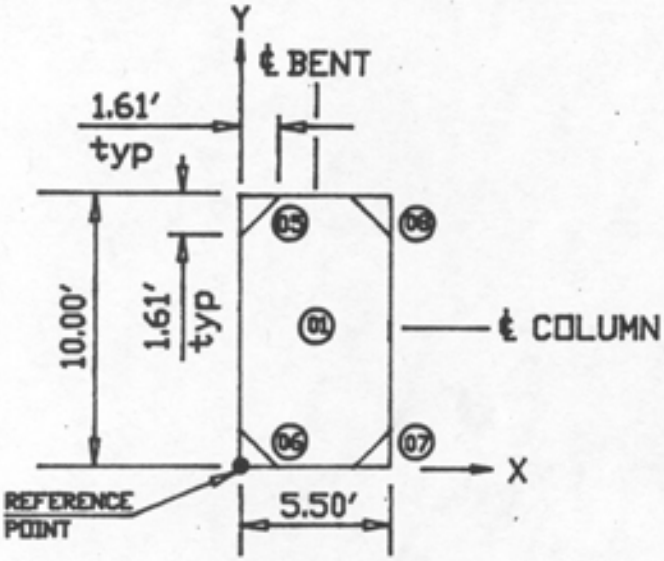

SECTION C-C

(MEMBERS 2 & 3)

NOTES:

1. NUMBERS IN CIRCLES REPRESENT PART CODE NUMBERS.
2. BENT CAP PART CODES:

   27 - BENT CAP DEPTH
   28 - TOP SLAB
   29 - BENT CAP
   30 - BOTTOM SLAB

FIND: The required P-jack, mild steel, and shear steel for the cap.

SOLUTION:

Although the analysis is done using the Bent program, the Frame program input forms are currently used to code the problem prior to accessing Bent from the BRIDGE menu. Bent data entry can then be done using either input panels or XEDIT. Note that because of space limitations on the terminal screen data input locations on the screen may not precisely match locations on the Forms.

The following Forms/Panels are used for this problem:

- Form A - Frame Description
- Form C - Section Properties by Parts (description of cap and column sections)
- Form N - Uniform Girder Data (live load distribution and girder reactions)
- Form G - Prestress Data (cable path)
- Form P - Live Load Lane Reaction (HS and P from BDS / FRAME output)

FORM A INPUTS

DEPARTMENT OF TRANSPORTATION
FRAME SYSTEM - FRAME DESCRIPTION
BS-D63 (REV. 9/87)

A

BDEOAA

Page _____ of _____

Name _____

Phone _____

Update	Line No.	Member No.	End Joint No. Lt	End Joint No. Rt	End Condition Lt	End Condition Rt	DIRECTION	Length ft	Min. I ft⁴	Hinge Location or Support Width ft	E ksi	Dead Load Uniform k/ft	Dead Load Unit Wt. pcf	Bridge Skew Angle Degrees Lt	Bridge Skew Angle Degrees Rt	Blank For Future	Conc. f'c ksi	Type	Recall Member	Recall Reverse R	D.L. Deflection	D.L. Subtracting %
9	10 11 12 13	14 15	16 17	18 19	20	21	22	23 24 25 26	27 28 29 30 31 32	33 34 35 36	37 38 39 40 41	42 43 44 45 46	47 48 49	50 51 52 53	54 55 56 57	58 59 60 61	62 63 64 65	66	67 68	69	70 71	72
		01	01	02	P	P	G	535					150				400	P				
		02	03	01		P		450		60			150				325					
		03	04	02		P		450		60			150				325					

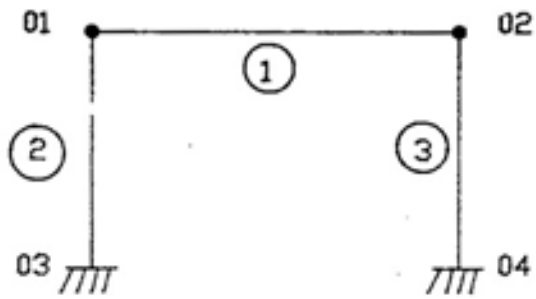

FORM C INPUTS

DEPARTMENT OF TRANSPORTATION
FRAME SYSTEM – SECTION PROPERTIES BY PARTS
DS-DM-(REV. 10/83)

C

BDEOAA
Page _____ of _____
Name _____
Phone _____

IDENT			
DIST.	GA.	BATCH	PROB.

SOURCE		CHARGE					PROGRAM NUMBER
DIST.	UNIT	DIST.	E.A.	SUB JOB	SPECIAL DESIGNATION	H.S.A.	R D E Ø 3 5

S/C 2091, 7310 S/C 2091

	Update Code	Line No.	Member No.	Cross Section Location	Recall	Sign + or −	Part Code	Vertical V or Depth D	Horizontal H	Ref. Pt. Coord. X	Ref. Pt. Coord. Y	Any Shape Area	Any Shape Ixx	Any Shape Iyy	Store
			0.1	0.0			0.1	7.50	6.00						
			0.1	0.0			2.7	7.50							0.1
*			0.1	1.14	0.1										
			0.1	1.15		+	2.8	0.64	13.67	0.0	6.86				
			0.1	1.15		+	2.9	6.40	6.00	3.84	0.46				
			0.1	1.15		+	3.0	0.46	11.50	1.08	0.0				
			0.1	1.15			2.7	7.50							0.2
*			0.1	4.97	0.2										
			0.1	4.98	0.1										
			0.2	0.0		+	0.1	10.00	5.50						0.3
			0.2	0.0		−	0.6	16.1	16.1	0.0	0.0				
			0.2	0.0		−	0.8	16.1	16.1	5.50	10.00				
			0.2	0.0		−	0.7	16.1	16.1	5.50	0.0				

	Update Code	Line No.	Member No.	Cross Section Location	Recall	Sign + or −	Part Code	Vertical V or Depth D	Horizontal H	Ref. Pt. Coord. X	Ref. Pt. Coord. Y	Any Shape Area	Any Shape Ixx	Any Shape Iyy	Store
			0.2	0.0		−	0.5	16.1	16.1	0.0	10.00				
			0.3		0.3										

20 S/C 7312

PART CODES

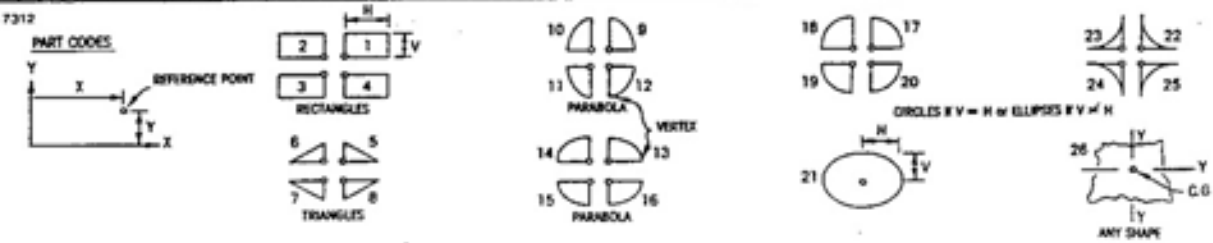

* NOTE: THESE LINES ARE NEEDED TO DEFINE THE ABRUPT CHANGE IN CROSS SECTION.

FORM G INPUTS

DEPARTMENT OF TRANSPORTATION
FRAME SYSTEM - PRESTRESSED DATA
05-0150 (REV. 9/87)

BDEOAA
Page _____ of _____
Name _____
Phone _____

G

Update: Code	Update: Line No.	Trial No.	Frame No.	Path No.	Member No.	Cable Path: LLT %	LLP %	LRT %	YLT ft.	YLP ft.	YRT ft.	XLT ft.	XRT ft.	Specifications: u X10⁻²	k X10⁻⁴	fs KSI	% Jack	End	Anchor Set: LT. % in.	Anchor Set: RT. % in.	Allow. Tension: Spec.	Allow. Tension: %	P-Jack KIPS	Low Relax.	f'c KSI	% Shortening	Losses KSI
9	10 11 12 13	14 15	16	17	18 19	20 21	22 23	24 25	26 27 28 29	30 31 32 33	34 35 36 37	38 39 40 41	42 43 44 45	46 47	48 49 50	51 52 53	54 55	56	57 58	59 60	61	62 63	64 65 66 67 68	69	70 71	72	73 74
		01	1	1	01	0	50	0	375	683	375							L			Y						

85 S/C 7315

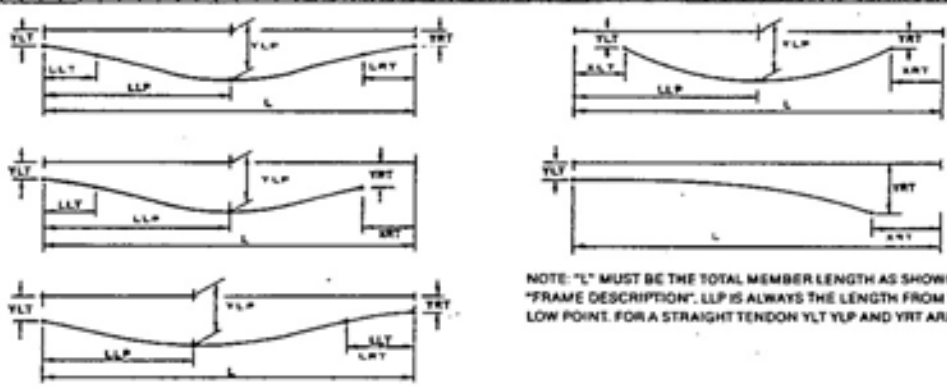

NOTE: "L" MUST BE THE TOTAL MEMBER LENGTH AS SHOWN ON "FRAME DESCRIPTION". LLP IS ALWAYS THE LENGTH FROM THE LEFT END TO THE LOW POINT. FOR A STRAIGHT TENDON YLT YLP AND YRT ARE REQUIRED INPUT.

NOTES: Prestress from left end only; Default anchor set is 3/8 inch; Default Fc' is 4.0 Ksi.

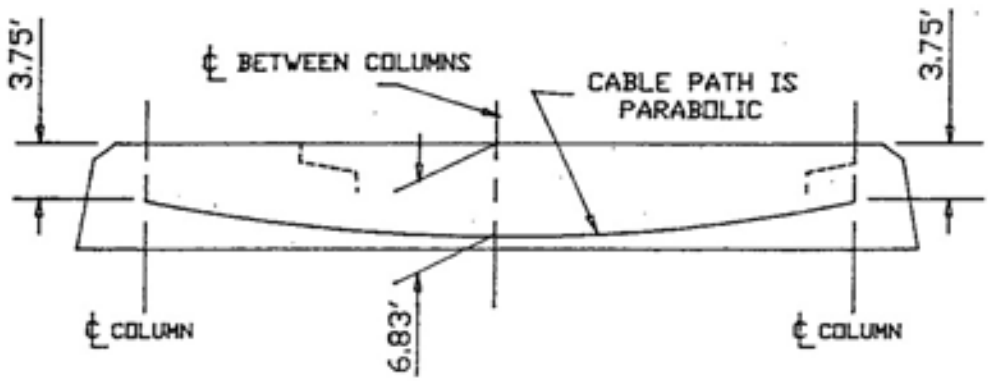

CABLE PATH

FORMS N and P INPUTS

DEPARTMENT OF TRANSPORTATION
FRAME SYSTEM - LOADING; UNIFORM GIRDER DATA
DS-S-165 (REV. 9/87)

N

BDEOAA
Page ______ of ______
Name ______________
Phone ______________

65	66	67	68	69	70
3	0	7	3	1	3

EQUALLY SPACED GIRDER DATA						CURB DATA		COEFFICIENT OF LATERAL EARTH	WIND LOADS							
REACTION (kips)			Location of Left Ext from left End of Cap	NO. OF GIRDERS	Girder Spacing (ft)	Left Curb from Left End of Cap (ft)	Curb to Curb Distance (ft)		Group 2* KIPS	Group 3 **			Skew Angle (degrees)			
Left Exterior	Interior	Right Exterior								Bottom psf	Top psf	Cover Ft.				
16–19	20–23	24–27	28–31	32–33	34–37	38–42	43–47	48–49	50–53	54–56	57–59	60–62	63–67	68	69	70–71
5200	5100	5100	1725	5	800	1475	3700									

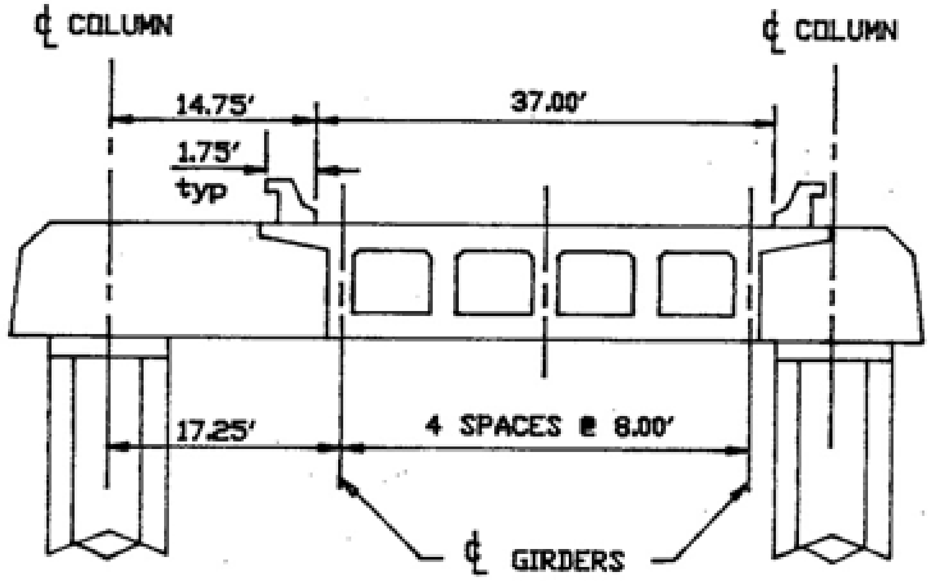

OUTRIGGER BENT - PRESTRESSED

DEPARTMENT OF TRANSPORTATION
FRAME SYSTEM - LIVE LOAD REACTIONS
DS-S-167 (REV. 9/87)

P

75	76	77	78	79	80
5	5	7	3	1	7

LIVE LOAD REACTIONS PER TRUCK (LANE)*													
STANDARD HS TRUCK						STANDARD P LOADS							
MAXIMUM AXIAL FORCE			MAXIMUM LONGITUDINAL MOMENT			MAXIMUM AXIAL FORCE			MAXIMUM LONGITUDINAL MOMENT				
AXIAL (kips)	MOMENT FT KIPS		AXIAL (kips)	MOMENT FT KIPS		AXIAL (kips)	MOMENT FT KIPS		AXIAL (kips)	MOMENT FT KIPS			
	TOP	BOTTOM		TOP	BOTTOM		TOP	BOTTOM		TOP	BOTTOM		
16–19	20–24	25–29	30–33	34–38	39–43	44–47	48–52	53–57	58–61	62–66	67–71	72	73–74
182	0	0	0	0	0	340	0	0	0	0	– 0		

RESULTS:

Attached is a complete Bent output for this example.

The Bent program first determines the minimum required P-jack based upon the HS loading. The P-loading information is ignored. Then, taking into account P-loading and the calculated mimimum required P-jack required for HS loading, the program calculates the ultimate applied and resisting moment and shear requirements. In this example, there are no mild steel requirements for the cap since the resisting moment provided by the P-jack (based upon no tension under dead load) exceeds the ultimate factored moment due to dead and live loads combined.

NOTE:

DO NOT USE THE G AND R CARD SIMULTANEOUSLY. THE R CARD DATA WILL OVERRIDE THE PRESTRESS DATA FROM THE G CARD, AND THE MILD STEEL WILL BE CALCULATED AS IF FOR A NON-PRESTRESSED REINFORCED CAP.