```
ANALYSIS              TRIAL NO.  1          PRE-TENSIONED
=======              ==========            ============

0   GROSS SECTION PROPERTIES - GIRDER      (PROPERTIES CALCULATED FROM BUILT-UP SECTIONS)
    ---------------------------------      (       ITOT = I00 + AY2 - SUM ( AY * YB )       )
                      AREA          YB          AY          AY2          I00          ITOT
                  (10^3*mm^2)      (mm)    (10^3*mm^3)  (10^6*mm^4)  (10^6*mm^4)  (10^6*mm^4)
      GROSS GDR SEC    441          541      238609       140434        38896        50300
0   GROSS COMPOSITE SECTION PROPERTIES      (PROPERTIES CALCULATED FROM BUILT-UP SECTIONS)
    ---------------------------------      (       ITOT = I00 + AY2 - SUM (AY * YB )       )
                      AREA          YB          AY          AY2          I00          ITOT
      GIRDER ONLY      441          541      238609       140434        38896        50300
      SLAB ONLY        460         1200      552000       662400         1533
      FILLET ONLY        0            0           0            0            0
      OVRHNG ONLY        0            0           0            0            0
      COMP SEC PROP    901          877      790609       802834        40430       149712

    CALCULATED SIMPLY SUPPORTED BEAM MOMENTS
    ----------------------------------------
      XM1 = DEAD LOAD OF GIRDER ONLY  =    546.4
      XM2 = DEAD LOAD OF SLAB + FILLET=    572.5
      XM3 = ADDED DEAD LOAD           =    298.3     INPUTTED VALUE
      XM4 = LIVE LOAD MOMENT          =   1103.1     RS20-44 TRUCK LOADING
      XULMA = ULTIMATE MOMENT APPLIED =   4228.4     1.3*(XM1+XM2+XM3) + 1.3*(P5 TRUCK)

                                    PRESTRESSED GIRDER ANALYSIS                                  PAGE  3

    STRESSES W/O PRESTRESS - USING GROSS CROSS-SECTIONS
    ---------------------------------------------------
                          MOMENT (kN-m)          FT (kPa)          FB (kPa)
      DL GIRDER                546.              6075.             -5874.
      DL SLAB + FILLET         572.              6364.             -6154.
      ADDED DL                 298.               444.             -1748.
                          -----------          --------          --------
      TOTAL DL                1417.             12883.            -13775.
      (LL+I)H                 1103.              1641.             -6463.
                          -----------          --------          --------
      TOTAL DL + (LL+I)         ---              14524.            -20238.

    DESIGN STRESS - F DES (kPa)      (GREATER OF THE FOLLOWING)
    ---------------------------
      FB - 0.5*SQRT(F'C) * ALL. TEN. FACTOR  =   17601.          FB (DL + ADD. DL)          =   13775.
      NOTE :-  REAL CALCULATIONS ARE IN ENGLISH UNITS

0   FINAL TRANSFORMED GIRDER PROPERTIES      (PROPERTIES CALCULATED FROM BUILT-UP SECTIONS)
    ---------------------------------      (       ITOT = I00 + AY2 - SUM ( AY * YB )       )
                      AREA          YB          AY          AY2          I00          ITOT
                  (10^3*mm^2)      (mm)    (10^3*mm^3)  (10^6*mm^4)  (10^6*mm^4)  (10^6*mm^4)
      GROSS GDR SEC    441          541      238609       140434        38896        50300
      (N-1)*AS'         13          100        1303          130          ---
      TRAN GDR SEC     454          528      239912       140564        38896        52758
0   FINAL TRANSFORMED COMPOSITE GIRDER PROPERTIES      (PROPERTIES CALCULATED FROM BUILT-UP SECTIONS)
    ---------------------------------------------      (       ITOT = I00 + AY2 - SUM ( AY * YB )       )
                      AREA          YB          AY          AY2          I00          ITOT
      TRAN COMP GDR    914          866      791912       802964        40430       157469
                          (E*YT)/R**2 =  2.1081          (E*YB)/R**2 =  1.9468
```

STRESSES W/O PRESTRESS - USING FINAL TRANSFORMED CROSS-SECTIONS

	MOMENT (kN-m)	FT (kPa)	FB (kPa)
DL GIRDER	546.	5322.	-5469.
DL SLAB + FTTLTY	572.	6205.	-5730.
ADDED DL	298.	443.	-1641.
TOTAL DL	1417.	12970.	-12840.
(LL+I)U	1109.	1630.	-6047.
TOTAL DL + (LL+I)	---	14208.	-18907.

DESIGN STRESS - F DES (kPa) (GREATER OF THE FOLLOWING)

FB = 0.5*SQRT(F'C) * ALL. TEN. FACTOR = 16270. FB (DL + ADD. DL) = 12840.

NOTE :- REAL CALCULATIONS ARE IN ENGLISH UNITS

PRESTRESSED GIRDER ANALYSIS PAGE 4

PRESTRESSING FORCE - PRESTRESSED

ALLOW. TENSION = (FS * .75) - 241.32) * 1154813. (kPa) FINAL PRESTRESS FORCE - PF = 2537221. (N)

AREA OF PRESTRESSING STEEL - AST = 2.17 (10^3*mm^2) INITIAL PRESTRESS FORCE - PI = 2836328. (N)

STRESSES WITH PRESTRESS - USING FINAL TRANSFORMED CROSS-SECTIONS (kPa)

AT MIDSPAN	TOP FIBER		BOTTOM FIBER
@ STRESSING (PTI)	-997.	(FBI)	12532.
@ DL GIRDER+SLAB (FTF)	6211.	(FBF)	5066.
@ FULL DES. LOAD (FTF)	6092.	(FBF)	-2641.

AT 1/3 POINT ALONG SPAN LENGTH — TENDONS BARRED AT 1/3 POINTS

(ASSUME DL OR LL STRESS AT 1/3 PT. = 0.80 * STRESS @ CL)

@ STRESSING (PTI)	-1649.	(FBI)	13534.
@ FULL DEAD LOAD (FTF)	4677.	(FBF)	6296.
@ FULL DES. LOAD (FTF)	6529.	(FBF)	-562.

CONCRETE STRENGTH REQUIRED (kPa)

FCI = FTMAX/.60 = 22547. FC = FBMAX/.40 = 20220. FCMAX (USE) = 27994.

DEFLECTIONS (mm) (DOWNWARD POSITIVE)

DFI= -41.60 DDs= 18.10 DDc= -23.50 DFF= -25.38 DDSB= 18.96 DACC= 3.30 DN= -6.1

CHECK ULTIMATE RESISTING MOMENT

MOMT. INDEX = .063 ULT. RESIST. MOMENT (kN-m)= 4289.75

FSU (kPa) = 1801366. N.A @ ULTIMATE LOAD (mm) = 154.53

PRESTRESSED GIRDER ANALYSIS PAGE 3

PROBLEM - FINAL PRESTRESSING FORCE CALCULATED

SECT. NO.	STRESSES INITIAL TOP (kPa)	INITIAL BOTTOM (kPa)	FINAL TOP (kPa)	FINAL BOTTOM (kPa)	CONCRETE STRENGTH INIT. (MPa)	CONCRETE STRENGTH FINAL (MPa)	PRESTRESS FORCE (kN)	ULTIMATE MOMENT ARMLD (kN-m)	ULTIMATE MOMENT RSTG (kN-m)	DEFLECTIONS (mm) DFI (mm)	DFF (mm)	DF2 (mm)	DF3 (mm)	SECTION PROPERTIES GIRDER I (10^6*mm^4)	GIRDER A (10^3*mm^2)	GIRDER YB (mm)	COMPOSITE I (10^6*mm^4)	COMPOSITE YB (mm)
0 1	-996	12532	6092	-2641	22.5	20.2	2507	4228	4290	-41.6	-23.5	18.5	-6.1	52758	454	528	157469	866

NOTE: DEFLECTIONS ARE POSITIVE DOWNWARD

NOTE: DEFLECTIONS ARE BASED ON INPUT E-S F'C

NOTE: FOR E-S CONCRETE F'C USE 27994. kPa

Example Problem 5 (English)

Rectangular Girder

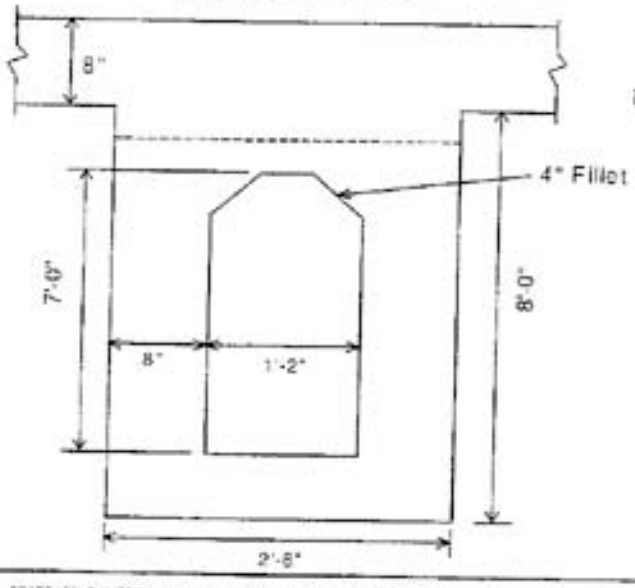

Using Section by Parts cards

Girder spacing = 96 in
Span length = 125 ft
ED - ED = 64 ft

Dead load mmoment = 740 k-ft
(AC+barrier)

STATE OF CALIFORNIA • DEPARTMENT OF TRANSPORTATION
CALTRANS DESIGN SYSTEM
PRESTRESSED GIRDER ANALYSIS
DS-D-0018 (REV. 11/97)

A
English

Trial No.	Section No.	Girder Properties: Structure Depth (Ht) (in)	Girder Depth (Ht) (in)	Girder Spacing (S)** (in)	PS f'c (ksi)	Span Length (L) (ft)	Composite Slab: Thick (Ht) (in)	Width (Bt) (in)	Super (SLD) (%)	f'c (ksi)	Prestress Data: Type Prestension	f's (ksi)	XCL (in)	XND (in)	Low Limit	Allowable Tension Factor	Final Prestress Force (kips)	Live Load Lanes	Moments: Note A DLM Applied to Initial Section (kip-ft)	Note B DLM Applied to TFD Initial Section (kip-ft)	Note C DLM Applied to Final Section (kip-ft)	Note D (LL+1)M Applied to Final Section (kip-ft)
1	1	9.0	5	1.0	4.0	9.6		1.2	5	8.0			3.0	5.4	1	1.0					7.4	0

STATE OF CALIFORNIA • DEPARTMENT OF TRANSPORTATION
CALTRANS DESIGN SYSTEM
PRESTRESSED GIRDER ANALYSIS - SECTION BY PARTS
DS-D-0128 (REV. 11/97)

C
English

Section No.	S	Cross Section Location (ft)	Recall	Sign (+ or -)	Part Code	Part Dimensions: Vertical V or Depth D (ft)	Horizontal H (ft)	Ref. Pt. Cord.: X (ft)	Y (ft)	Any Shape: Area (ft²)	I_{xx} (ft⁴)	I_{yy} (ft⁴)	Store No.
1					1	5.0	0.6	0.0	0.0				
1					1	8.0	0.6	1.8	0.0				
1					1	0.5	1.1	0.6	0.0				
1					1	0.5	1.1	0.6	7.5				
1					8	0.3	0.3	0.6	7.5				
1					7	0.3	0.3	0.3	7.5				

Output for Example Problem 5:

```
                    CALIFORNIA DEPARTMENT OF TRANSPORTATION                                   PAGE  1
                    PRESTRESSED GIRDER ANALYSIS
                    (VERSION 2.00)

 SECTION DATA - FROM SUPERSTRUCTURE SECTIONS/SECTIONS BY PARTS

GIRDER, S  SIGN CODE    V       E       X       Y
 NO.
  1  0   +     1    8.00     .67     .00     .00
  1  0   +     1    8.00     .67    1.83     .00
  1  0   +     1     .50    1.17     .67     .00
  1  0   +     1     .50    1.17     .67    7.50
  1  0   +     5     .33     .33     .67    7.50
  1  0   +     7     .33     .33    1.83    7.50

                    PRESTRESSED GIRDER ANALYSIS

INPUT  DATA
                                                   P
                                                   R                    L
                                                   E                    O
 T S                                               T                    W
 R E                                             T E                                    DEM    DEM    DEM   GLA+DIN
 I C                                             Y N        X    X  L      FINAL  LIVE   APPLIED APPLD  APPLD APPLD
 A T  SPAN  GRDR  GRDR  F'C  SLAB  — COMPOSITE SLAB —  F S        C    N  A ALL  PREST  LOAD  TO    TO END TO    TO
 L N  DEPTH DEPTH SPAC  F'C  LENG  THCK WDTH SLPE  F'C  E N  F'S  L    D  X TEN  FORCE  LANES SECTION SECT. FINAL SECT.
      (IN.) (IN.) (IN) (KSI) (FT)  (IN) (IN) (%)  (KSI)     (KSI) (IN) (IN)        (KIP)        (K-FT) (K-FT) (K-FT) (K-FT)

 1 1  104.0  96.0  96 :4.0: 125.   8.0  96.   .0 :3.3: 0 0 :270.  3.0   5.4  Y 1.0     0.    .00     0     0   740     0

NOTE: ASSUMED DATA IS BRACKETED BY COLONS.


    ANALYSIS              TRIAL NO.  1          POST-TENSIONED

0   GROSS SECTION PROPERTIES - GIRDER        (PROPERTIES CALCULATED FROM BUILT-UP SECTIONS)
                                             (      IZZ = I00 + AX2 - SUM ( AY * YB )      )
                          AREA      YB        AY        AX2        I00        IZZ
                          (IN2)    (IN)      (IN3)     (IN4)      (IN4)      (IN4)
      GROSS GDR SEC      1727.8    48.4     83574.   4409311.   1186066.   1552953.
0   GROSS COMPOSITE SECTION PROPERTIES       (PROPERTIES CALCULATED FROM BUILT-UP SECTIONS)
                                             (      IZZ = I00 + AX2 - SUM (AY * YB )       )
                          AREA      YB        AY        AX2        I00        IZZ
      GIRDER ONLY        1727.8    48.4     83574.   4409311.   1186066.   1552953.
      SLAB ONLY           768.0   100.0     76800.   7680000.      4096.
      FILLET ONLY           .0      .0        0.         0.         0.
      OVERHG ONLY           .0      .0        0.         0.         0.
      COMP SEC PROP      2496.8    64.2    160374.  12089311.   1190162.   2974364.

    CALCULATED SIMPLY SUPPORTED BEAM MOMENTS

      XM1 = DEAD LOAD OF GIRDER ONLY  =   3516.4
      XM2 = DEAD LOAD OF SLAB + FILLET=   1563.0
      XM3 = ADDED DEAD LOAD           =    740.0    INPUTED VALUE
      XM4 = LIVE LOAD MOMENT          =   1722.6    HSS20-44 TRUCK LOADING
      XTOMA = ULTIMATE MOMENT APPLIED =  14211.2    1.3*(XM1+XM2+XM3) + 1.3*(P15 TRUCK)
```

PRESTRESSED GIRDER ANALYSIS PAGE 3

STRESSES W/O PRESTRESS - USING GROSS CROSS-SECTIONS

	MOMENT (K')	FT (PSI)	FB (PSI)
DL GIRDER	3516.	1294.	-1314.
DL SLAB + FILLET	1563.	575.	-584.
ADDED DL	740.	96.	-192.
TOTAL DL	5819.	1964.	-2090.
(LL+I)N	1722.	221.	-446.
TOTAL DL + (LL+I)	---	2185.	-2537.

DESIGN STRESS - F DES (PSI) (GREATER OF THE FOLLOWING)

FB - 6 * SQRT(F'C) * ALL. TEN. FACTOR = 2157. FB (DL + ADD. DL) = 2090.

PRESTRESSED GIRDER ANALYSIS PAGE 4

0 FINAL NET TRANSFORMED GIRDER PROPERTIES (PROPERTIES CALCULATED FROM BUILT-UP SECTIONS)
(ITOT = I00 + AY2 - SUM (AY * YB))

	AREA (IN2)	YB (IN)	AY (IN3)	AY2 (IN4)	I00 (IN4)	ITOT (IN4)
GROSS GDR SEC	1727.8	48.4	83574.	4409311.	1186066.	1552963.
P/S DUCT	-12.8	3.0	-38.	-115.	---	
NET TRAN GDR	1715.1	48.7	83536.	4409196.	1186066.	1526457.

0 FINAL TRANSFORMED GIRDER PROPERTIES (PROPERTIES CALCULATED FROM BUILT-UP SECTIONS)
(ITOT = I00 + AY2 - SUM (AY * YB))

	AREA	YB	AY	AY2	I00	ITOT
GROSS GDR SEC	1727.8	48.4	83574.	4409311.	1186066.	1552963.
(N-1)*AS'	38.3	3.0	115.	345.	---	
TRAN GDR SEC	1766.2	47.4	83689.	4409656.	1186066.	1630146.

0 FINAL TRANSFORMED COMPOSITE GIRDER PROPERTIES (PROPERTIES CALCULATED FROM BUILT-UP SECTIONS)
(ITOT = I00 + AY2 - SUM (AY * YB))

	AREA	YB	AY	AY2	I00	ITOT
TRAN COMP GDR	2534.2	63.3	160489.	12089656.	1190162.	3116031.

(E*YT)/R**2 = 2.4287 (E*YB)/R**2 = 2.5013

STRESSES W/O PRESTRESS - USING FINAL TRANSFORMED CROSS-SECTIONS

	MOMENT (K')	FT (PSI)	FB (PSI)
DL GIRDER	3516.	1307.	-1346.
DL SLAB + FILLET	1563.	559.	-545.
ADDED DL	740.	93.	-180.
TOTAL DL	5819.	1960.	-2072.
(LL+I)N	1722.	217.	-420.
TOTAL DL + (LL+I)	---	2176.	-2492.

DESIGN STRESS - F DES (PSI) (GREATER OF THE FOLLOWING)

FB - 6 * SQRT(F'C) * ALL. TEN. FACTOR = 2113. FB (DL + ADD. DL) = 2072.

```
                                PRESTRESSED GIRDER ANALYSIS                                                    PAGE 5

PRESTRESSING FORCE - POST-TENSIONED
-----------------------------------
  ALLOW. TENSION = (.75 * .70) - 20.00) =  160000. (PSI)      ALLOW. TENSION = (.75 * .60)  =  162000. (PSI)
  ALLOW. TENSION USED                   =  162000. (PSI)      FINAL PRESTRESS FORCE   - PF = 1035016. (LBS)
  AREA OF PRESTRESSING STEEL - AST      =    6.39 (IN2)       INITIAL PRESTRESS FORCE - PI = 1208123. (LBS)
STRESSES WITH PRESTRESS - USING FINAL TRANSFORMED CROSS-SECTIONS (PSI)
----------------------------------------------------------------------
AT MIDSPAN                  TOP FIBER                 BOTTOM FIBER
----------                  ---------                 ------------
  @ STRESSING       (PSI)     307.          (PSI)      1106.
  @ DL GIRDER+SLAB  (PSI)    1035.          (PSI)       221.
  @ FULL DES. LOAD  (PSI)    1314.          (PSI)      -379.

CONCRETE STRENGTH REQUIRED (PSI)
--------------------------------
  FCI = FDMAX/.55 =   2009.      FCI   (USE) =   3500.      FC = DMAX/.40 =   3285.      FDMAX (USE) =   4000.

DEFLECTIONS (INCHES)      (CAMBER POSITIVE)
-----------------------
  DP= -2.5284    DD= 1.6929    DW= -.8455    DPP= -.8511    DSLB= .7480    DNDL= .1653    DT= .0823

CHECK ULTIMATE RESISTING MOMENT
-------------------------------
  REINF. INDEX =      .053                 DEF. RESIST. MOMENT (K-FT)= 12986.06
  FSU    (PSI) =  242610.                  N.A @ ULTIMATE LOAD (IN) =     7.44

                                PRESTRESSED GIRDER ANALYSIS                                                    PAGE 6

RESULTS - FINAL PRESTRESSING FORCE CALCULATED

TRIAL      STRESSES              CONCRETE   FINAL     ULTIMATE                DEFLECTIONS                 SECTION PROPERTIES
 NO.   INITIAL       FINAL       STRENGTH   PREST     MOMENT                  (SEE MEMO)                GIRDER              COMPOSITE
     TOP BOTTOM  TOP BOTTOM  INIT. FINAL   FORCE   ABSLD   RESIS    DP1   DSF1  DSF2  DSF3     I     A    YB      I    YB
     (PSI) (PSI) (PSI) (PSI) (PSI) (PSI)   (KIPS)  (K-FT)  (K-FT)   (FT)  (FT)  (FT)  (FT)   (IN4) (IN2) (IN)   (IN4) (IN)
0  1   307. 1106. 1314. -379.  2.01  3.29  1035.  14211.2 12986.9  -.211 -.070  .062  .007 163045 1766  47.4 316620  63.3
   NOTE: DEFLECTIONS ARE POSITIVE CAMBER
   NOTE: DEFLECTIONS ARE BASED ON INPUT F-S F'C
   NOTE: FOR F-S CONCRETE F'C USE 4000. PSI
   NOTE: APPLIED ULTIMATE MOMENT EXCEEDS ULTIMATE RESISTING MOMENT. MILD STEEL IS REQUIRED.
```

Note: If parts are divided in a different way, a slightly different result will be achieved. By editing the text file in free formatted mode to the significant digits required to achieve the desired accuracy, the way of analysis will not affect the results.

Example Problem 6 (English)

Cored Slab Section

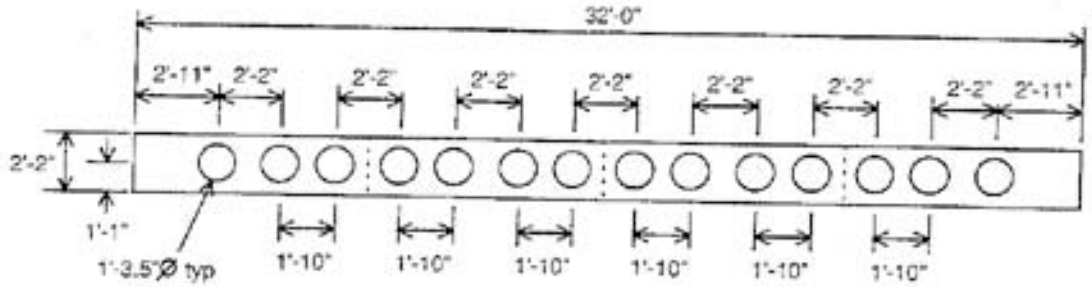

STATE OF CALIFORNIA • DEPARTMENT OF TRANSPORTATION
CALTRANS DESIGN SYSTEM
PRESTRESSED GIRDER ANALYSIS
DS-D-0018(REV. 11/97)

A
English

Trial No.	Section No.	Girder Properties: Structure Depth (Hg) (in)	Girder Depth (Hg) (in)	Girder Spacing (S)** (in)	PS f'c (ksi)	Span Length (L) (ft)	Composite Slab: Thick (Hc) (in)	Width (Sb) (in)	Super (SLO) (in)	f'c (ksi)	Prestress Data: Type Prestressing	f's (kip)	XCL (ft)	XND (in)	Low Limit	Allowable Tension Factor	Final Prestress Force (kips)	Live Load Lanes	Moments: Note A DLM Applied to Initial Section (kip-ft)	Note B DLM Applied to TFD Initial Section (kip-ft)	Note C DLM Applied to Final Section (kip-ft)	Note D (LL+1)M Applied to Final Section (kip-ft)
1	1	2.6.0	2.5.0	3.6.4		5.0					1		3.0	3.0	1	0.5					4.5.0	2.2.3.7

STATE OF CALIFORNIA • DEPARTMENT OF TRANSPORTATION
CALTRANS DESIGN SYSTEM
PRESTRESSED GIRDER ANALYSIS - SUPERSTRUCTURE SECTION
DS-D-0018(REV. 11/97)

B
English

Section No.	S	Cross Section Location (ft)	Recall	Ref. Pt. Cord.: X (ft)	Y (ft)	S. S. Data: Width S.S.-S.D. (ft)	Depth (ft)	Slab Data: Top Thickness (in)	Bottom Thickness (in)	Interior Girders: No. of Girders	Web Thick. (in)	Exterior Girders: Left: Type	Web Thick. (in)	Factor (ft)	Right: Type	Web Thick. (in)	Factor (ft)	Overhangs: Left: Length (ft)	Ext. Thick. (in)	Int. Thick. (in)	Right: Length (ft)	Ext. Thick. (in)	Int. Thick. (in)
1						3.2.0	2.1.6	6.0.0	6.0.0	2	9.6	0	9.6	0.0.0	0	9.6							

Output for Example Problem 6:

CALIFORNIA DEPARTMENT OF TRANSPORTATION
PRESTRESSED GIRDER ANALYSIS
(VERSION 2.00)

Page 1

SECTION DATA - FROM SUPERSTRUCTURE SECTIONS/SECTIONS BY PARTS

GIRDT. NO.	S	X	Y	SUPERSTRUCTURE WIDTH	SUPERSTRUCTURE DEPTH	SLAB THICKNESS TOP	SLAB THICKNESS BOTTOM	INT. GIRDER NO.	INT. GIRDER WEB
1	0	.00	.00	32.0	2.16	6.00	6.00	2	96.

LT. EXT. GIRDER TYPE	LT. EXT. GIRDER WEB	LT. EXT. GIRDER FACTOR	RT. EXT. GIRDER TYPE	RT. EXT. GIRDER WEB	RT. EXT. GIRDER FACTOR	LT. OVERHANG LENGTH	LT. OVERHANG EXT.	LT. OVERHANG INT.	RT. OVERHANG LENGTH	RT. OVERHANG EXT.	RT. OVERHANG INT.
0	96.	.00	0	96.	.00	.0	0.	0.	.0	0.	0.

GIRDT. NO.	S	SIGN	CTRE	V	H	X	Y
1	0	-	21	.65	.65	2.92	1.08
1	0	-	21	.65	.65	5.08	1.08
1	0	-	21	.65	.65	6.91	1.08
1	0	-	21	.65	.65	9.07	1.08
1	0	-	21	.65	.65	10.90	1.08
1	0	-	21	.65	.65	13.06	1.08
1	0	-	21	.65	.65	14.89	1.08
1	0	-	21	.65	.65	17.05	1.08
1	0	-	21	.65	.65	18.88	1.08
1	0	-	21	.65	.65	21.04	1.08
1	0	-	21	.65	.65	22.87	1.08
1	0	-	21	.65	.65	25.03	1.08
1	0	-	21	.65	.65	26.86	1.08
1	0	-	21	.65	.65	29.04	1.08

PRESTRESSED GIRDER ANALYSIS

PAGE 2

INPUT DATA

TRIAL	SECT DEPTH (IN.)	GIRD DEPTH (IN.)	GIRD SPAC (IN)	P-S F'C (KSI)	SURF LONG (FT)	— COMPOSITE SLAB — THICK (IN)	WIDTH (IN)	SURF (%)	F'C (KSI)	PRIMARY YIELD	F'S (KSI)	X CL (IN)	X CN (IN)	LOAD LANES	ALL SIGN	FINAL INPUT FORCE (KIP)	LINE LOAD	DIM ANALYZED TO INITIAL SECTION (K-FT)	DIM APPLD TO INCT. SECT. (K-FT)	DIM APPLD TO FINAL SECT. (K-FT)	(LLAT)M APPLD TO FINAL SECT. (K-FT)
1 1	26.0	26.0	384	4.0	60.	.0	0.	.0	:3.3:	0 1	:270:	3.0	3.0	Y	.5	0.	.00	0	0	650	2237

NOTE: ASSUMED DATA IS BRACKETED BY COLONS.

```
ANALYSIS              TRIAL NO.  1          PRE-TENSIONED
=======              ===========          =============

0   GROSS SECTION PROPERTIES - GIRDER      (PROPERTIES CALCULATED FROM BUILT-UP SECTIONS)
    ---------------------------------      [      ITOT = I00 + AY2 - SUM ( AY * YB )      ]
                        AREA        YB        AY        AY2        I00        ITOT
                       (IN2)      (IN)      (IN3)      (IN4)      (IN4)      (IN4)
      GROSS GDR SEC  7373.2      13.0     95557.    1698572.     59520.     519675.
0   GROSS COMPOSITE SECTION PROPERTIES     (PROPERTIES CALCULATED FROM BUILT-UP SECTIONS)
    ---------------------------------      [      ITOT = I00 + AY2 - SUM (AY * YB )      )
                        AREA        YB        AY        AY2        I00        ITOT
      GIRDER ONLY    7373.2      13.0     95557.    1698572.     59520.     519675.
      SLAB ONLY         .0        .0         0.         0.         0.
      FILLET ONLY       .0        .0         0.         0.         0.
      OVRENG ONLY       .0        .0         0.         0.         0.
      COMP SEC PROP  7373.2      13.0     95557.    1698572.     59520.     519675.

    CALCULATED SIMPLY SUPPORTED BEAM MOMENTS
    ----------------------------------------
      XM1 = DEAD LOAD OF GIRDER ONLY  =   3457.3
      XM2 = DEAD LOAD OF SLAB + FILLET=       .0
      XM3 = ADDED DEAD LOAD           =    450.0    INPUTTED VALUE
      XM4 = LIVE LOAD MOMENT          =   2237.0    INPUTTED VALUE
      XULMA = ULTIMATE MOMENT APPLIED =   9924.8    1.3*(XM1+XM2+XM3) + 2.17*XM4

                                  PRESTRESSED GIRDER ANALYSIS                                  PAGE  3

    STRESSES W/O PRESTRESS - USING GROSS CROSS-SECTIONS
    ---------------------------------------------------
                          MOMENT (K')          FT (PSI)          FB (PSI)
      DL GIRDER              3457.              1041.            -1035.
      DL SLAB + FILLET          0.                 0.                0.
      ADDED DL                450.               135.             -135.
                          ----------         --------          --------
      TOTAL DL               3907.              1177.            -1169.
      (LL+I)E                2237.               674.             -669.
                          ----------         --------          --------
      TOTAL DL + (LL+I)        ---              1850.            -1839.

    DESIGN STRESS - F DES (PSI)      (GREATER OF THE FOLLOWING)
    ---------------------------
      FB - 6 * SQRT(F'C) * ALL. TEN. FACTOR  =    1649.          FB (DL + ADD. DL)          =    1169.

0   FINAL TRANSFORMED GIRDER PROPERTIES    (PROPERTIES CALCULATED FROM BUILT-UP SECTIONS)
    ---------------------------------      [      ITOT = I00 + AY2 - SUM ( AY * YB )      )
                        AREA        YB        AY        AY2        I00        ITOT
                       (IN2)      (IN)      (IN3)      (IN4)      (IN4)      (IN4)
      GROSS GDR SEC  7373.2      13.0     95557.    1698572.     59520.     519675.
      (N-1)*AS'       153.7       3.0       461.       1383.       ---
      TRAN GDR SEC   7526.9      12.8     96018.    1699955.     59520.     534612.
0   FINAL TRANSFORMED COMPOSITE GIRDER PROPERTIES    (PROPERTIES CALCULATED FROM BUILT-UP SECTIONS)
    ---------------------------------------------    [      ITOT = I00 + AY2 - SUM ( AY * YB )      )
                        AREA        YB        AY        AY2        I00        ITOT
      TRAN COMP GDR  7526.9      12.8     96018.    1699955.     59520.     534612.
                          (E*YI)/R**2 =  1.8192          (E*YB)/R**2 =  1.7523
```

STRESSES W/O PRESTRESS - USING FINAL TRANSFORMED CROSS-SECTIONS

	MOMENT (K')	F2 (PSI)	F1 (PSI)
DL GIRDER	3457.	1028.	-990.
DL SLAB + FILLET	0.	0.	0.
ADDED DL	450.	134.	-129.
TOTAL DL	3907.	1162.	-1119.
(LL+I)H	2237.	665.	-641.
TOTAL DL + (LL+I)	---	1826.	-1759.

DESIGN STRESS - F DES (PSI) (GREATER OF THE FOLLOWING)

FB - 6 * SQRT(F'C) + ALL. PER. FACTOR = 1870. FB (DL + ADD. DL) = 1316.

PRESTRESSED GIRDER ANALYSIS PAGE 4

PRESTRESSING FORCE - PRESTRESSED

ALLOW. TENSION = (175 * .75) - 35.00) = 167500. (PSI) FINAL PRESTRESS FORCE - PF = 4290823. (LBS)
AREA OF PRESTRESSING STEEL - AST = 25.62 (IN2) INITIAL PRESTRESS FORCE - PI = 4854385. (LBS)

STRESSES WITH PRESTRESS - USING FINAL TRANSFORMED CROSS-SECTIONS (PSI)

AT MIDSPAN	TOP FIBER	BOTTOM FIBER
@ STRESSING (PSI)	499.	785.
@ DL GIRDER+SLAB (PSI)	561.	573.
@ FULL DES. LOAD (PSI)	1359.	-190.

CONCRETE STRENGTH REQUIRED (PSI)

PCI = FTMAX/.60 = 1490. PC = FMAX/.40 = 3398. FCMAX (PSI) = 4000.

DEFLECTIONS (INCHES) (DOWNWARD POSITIVE)

DFI= -1.5925 DD= 1.1624 DL= -.4300 DFF= -.3823 DSLB= .0000 DWCL= .1513 DF= -.2310

CHECK ULTIMATE RESISTING MOMENT

REINF. INDEX = .177 ULT. RESIST. MOMENT (K-FT)= 10086.29
FPU (PSI) = 243570. N.A @ ULTIMATE LOAD (IN) = 5.62

PRESTRESSED GIRDER ANALYSIS PAGE 5

RESULTS - FINAL PRESTRESSING FORCE CALCULATED

TOTAL NO.	STRESSES INITIAL TOP (PSI)	STRESSES INITIAL BOTTOM (PSI)	STRESSES FINAL TOP (PSI)	STRESSES FINAL BOTTOM (PSI)	CONCRETE STRENGTH INIT. (KSI)	CONCRETE STRENGTH FINAL (KSI)	FINAL PRESTR FORCE (KIPS)	ULTIMATE MOMENT APPLD (K-FT)	ULTIMATE MOMENT RSTG (K-FT)	DEFLECTIONS (INCH MEMB) DFI (FT)	DEF'L DFI' (FT)	DEF'L DFF' (FT)	DEF'L DFF (FT)	SECTION PROPERTIES: GIRDER I (IN4)	GIRDER A (IN2)	GIRDER YB (IN)	COMPOSITE I (IN4)	COMPOSITE YB (IN)
0 1	499.	785.	1359.	-190.	1.45	3.40	4292.	9924.8	10086.3	-.133	-.036	.000	-.019	534621	7527	12.8	534621	12.8

NOTE: DEFLECTIONS ARE POSITIVE DOWNWARD
NOTE: DEFLECTIONS ARE BASED ON INPUT F-S F'C
NOTE: FOR F-S CONCRETE F'C USE 4000. PSI

Appendix 1 - Explanation of Deflections

1. Single Girder with Composite Slab

Post-Tensioned

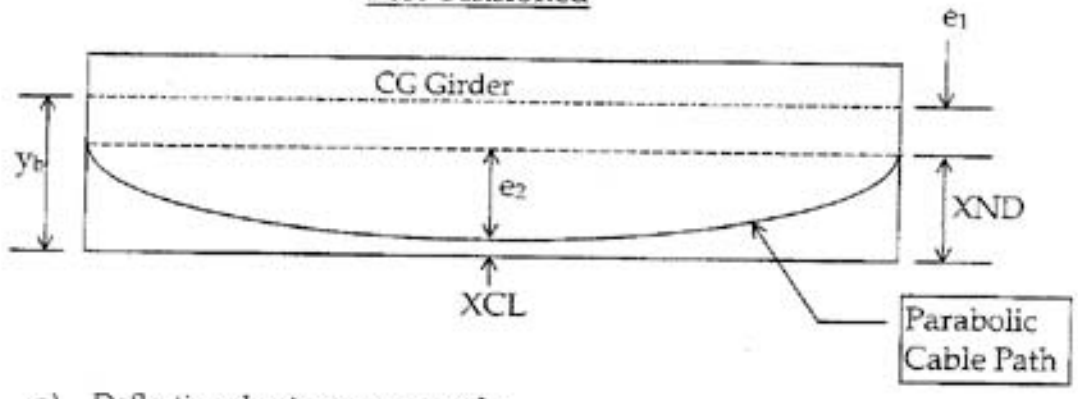

a) Deflection due to prestress only:

$$DPI = \frac{P_i L^2}{48\ EI}(5e_2 + 6e_1)$$

Pre-Tensioned

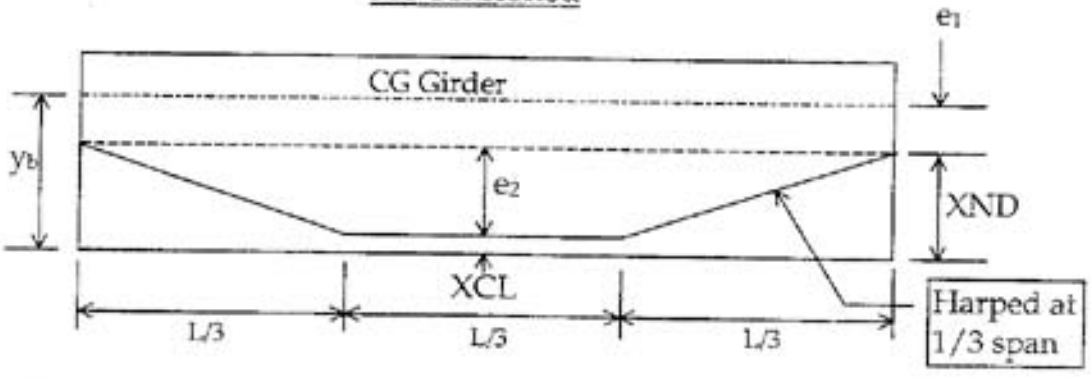

b) Deflection due to prestress only:

$$DPI = \frac{P_i L^2}{216\ EI}(23e_2 + 27e_1)$$

$e_1 = y_b - XND$ and $e_2 = XND - XCL$

c) Deflection due to dead load of girder:

$$DG = \frac{5W_G L^4}{384\ EI} = \frac{5M_1 L^2}{48\ EI}$$

Simply supported

$$M_1 = \frac{W_G L^2}{8}$$

due to the weight of the girder

d) Initial deflection - deflection due to P/S + deflection due to DI:

$$DI = DPI + DG$$

e) Deflection due to long term losses + creep:

$$DPF = -(0.89 \times DPI - DG) \times 1.5$$

f) Deflection due to dead load of slab:

$$DSLAB = \frac{5\,W_s L^4}{384\ EI} = \frac{5\,M_2 L^2}{48\ EI}$$

M_2 = Moment due to weight of slab

g) Final Deflection:

$$DF = DPF + DSLAB$$

2. **Box Girder**

DEF 1 $\quad DI = (5e_2 + 6e_1)\dfrac{P_f L^2}{48\ EI} \qquad DPI = (5e_2 + 6e_1)\dfrac{P_i L^2}{48\ EI}$

DEF 2 $\quad DSLAB = DG$

DEF 3 $\quad DF = \dfrac{5\,W L^4}{384\ EI} = \dfrac{40\,M_3 L^2}{384\ EI}$

Here M_3 = Moment due to added DL

Appendix 2

I - How to change the file created by a version older than 2.00 version into the file usable by 2.00 or later versions

By adding "Units" card, a file created by a version older than 2.00 version can be used by 2.00 or later versions. For illustration, one card from the text file of the old version of example problem 5 after adding the Units card is shown here. This Units card should have all variables as shown here. After adding the Units card, variables in the Units card can be changed with the help of the panel program. In this way, a file in the fixed format can be changed into a file in the free format.

Units Card to be added in the file created by a version older than 2.00 version

```
'Units' 'E' 'E' 'E'
 1   0  0 0+ 1 800  67  0  0  0    0    0 0        7691
```

II - Panel Program Operation

Following keys are used for the following functions when the panel program is used:

Key(s)	Function
F3	A question will appear on the screen whether user decides to quit the panel program. If F3 pressed again, the panel program will be quitted. Otherwise, the panel program will return to the previous status.
F7	Displays error messages in the current panel's data for certain errors. In absence of such errors, the panel before the current panel is displayed or, if the current panel is the first panel, the current panel is displayed.
F8	Displays error messages in the current panel's data for certain errors. In absence of such errors, the panel after the current panel is displayed or, if the current panel is the last panel, the current panel is displayed.

Key(s)	Function
F9	A question will appear on the screen whether user decides to save date used in the panel program. If F9 pressed again, the date in the panel program will be saved and the panel program will be quitted. Otherwise, the panel program will return to the previous status.
→	Shifts the cursor one space right in the current panel. If the cursor is on the last space of the current panel, the cursor shifts to the top of the current panel.
←	Shifts the cursor one space left in the current panel. If the cursor is on the first space of the current panel, the cursor shifts to the bottom of the current panel.
↑	Shifts the cursor one field left in the current panel. If the cursor is on the first field of the current panel, the cursor shifts to the last field of the current panel.
↓	Shifts the cursor one field right in the current panel. If the cursor is on the last field of the current panel, the cursor shifts to the first field of the current panel.
Enter (On numeric pad)	Checks the certain errors in the current panel's data, moves the cursor to the next blank line and displays the current panel.
Enter (Below Backspace)	Moves the cursor to the next line and displays the current panel.
Backspace	Erases the character/number/letter at the cursor and shifts the cursor one position back. If the cursor is at the first position of the field, the cursor shifts to the first position of the previous field.
Tab	It has the same effect as ↓ has.

Warning: Do not use any other key which is not mentioned here. Otherwise, any other key may cause interruption or termination of the panel program. For example, Delete, End, Esc, F10, F11, F12, Home, Insert, Page Up, Page Down, or Pause may cause interruption or termination of the panel program. If the panel program is interrupted or terminated, you may start the panel program again but the current data in the panels may be lost.

III- Tips for Free Formatted Version

1. Any data entered after a completely blank line is not saved.

2. All comments in the input file to the panel program are ignored. The text file, or the output file of the panel program shall have the comments decided by the panel program.

3. The data in the panels which are viewed might have different significant digits. Most of remaining data do not change their significant digits. Thus, it is recommended to see the panels which are necessary to view. In this way, significant digits of remaining data are not lost.

4. The panel program checks the certain errors in a line if all previous lines in the panel have the data. If the first field of the line is a trial number or section number, the first field and any other field should have the data in order to have this check. Otherwise, any field should have the data in order to have this check.

Appendix 3

Included in this section are full-sized forms of panels in English and Metric units to be photocopied and used by the engineers.

A Prestressed Girder Analysis

B Superstructure Section

C Sections by Parts

D Section Dimensions - Symmetric Sections

E Section Dimensions - Unsymmetric Sections

STATE OF CALIFORNIA • DEPARTMENT OF TRANSPORTATION

CALTRANS DESIGN SYSTEM
PRESTRESSED GIRDER ANALYSIS

DS-D-0018(REV. 5/97)

A
English

Trial No.	Section No.	Girder Properties: Structure Depth (H2) (in)	Girder Depth (H3) (in)	Girder Spacing (S)** (in)	PS f'c (ksi)	Span Length (L) (ft)	Composite Slab: Thick (Hl) (in)	Width (Bl) (in)	Super (SLO) (%)	f'c (ksi)	Prestress Data: Type	Pretension	f's (ksi)	XCL (in)	XND (in)	Low Lax	Allowable Tension Factor	Final Prestress Force (kips)	Live Load Lanes	Moments: Note A DLM Applied to Initial Section (kip-ft)	Note B DLM Applied to TFD Initial Section (kip-ft)	Note C DLM Applied to Final Section (kip-ft)	Note D (LL+1)M Applied to Final Section (kip-ft)
3 4	5	6 7 8 9	10 11 12 13	14 15 16	17 18	19 20 21	22 23 24	25 26 27	28 29 30	31 32	33	34	35 36 37	38 39 40	41 42 43	44	45 46	47 48 49 50 51	52 53 54 55	56 57 58 59 60	61 62 63 64 65	66 67 68 69 70	71 72 73 74 75

S/C 1791

INSTRUCTIONS:

If an Office of Structures standard section is used, enter correct code from table at right in Type and omit any supplementary section sheets.

If other than a standard section is used, it must be reffered to by "Section No." If described by "By Parts" of "Superstructure Sections", it must be described on the "Section Dimensions" sheet.

Pretension: If the system is pretensioned, enter a 1. Leave column blank for post-tension.

XCL is the dimension from bottom of girder to CGS at centerline of span, XND at end. If deflections are not desired, enter 99 in XND.

For low relaxation, enter a 1.

Allowable tension factor in tenths; 10 to 100%; 05 to 50%.

Code	Standard Type
1	"I" Girder

** Girder spacing (S) is width of the structure subjected to the HS20-44 live load.

NOTES: (See Memo to Designers 20-16)

A Omit when simple span DLM is due to the described section.

B Omit when simple span DLM is due to the described final section. DLM should not include DLM of note A.

C Show the additional DLM applied to the final girder section.

D Omit when max H20-44 simple span moment is that for the described girder spacing (S) and span length (L). The distribution factor assumed is S/5.5.

Omit Live Load Lanes to use S-over Distribution Factor.

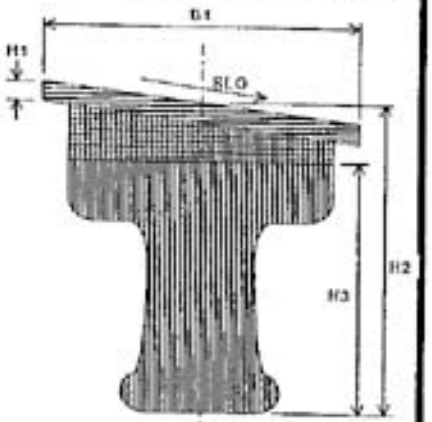

STATE OF CALIFORNIA • DEPARTMENT OF TRANSPORTATION

CALTRANS DESIGN SYSTEM

PRESTRESSED GIRDER ANALYSIS - SUPERSTRUCTURE SECTION

DS-D-0018 (REV. 11/87)

B

English

Section No.	S	Crosss Section Location (ft)	Recall	Ref. Pt. Cord. X (ft)	Ref. Pt. Cord. Y (ft)	S. S. Data Width E.D.-E.D. (ft)	S. S. Data Depth (ft)	Slab Data Top Thickness (in)	Slab Data Bottom Thickness (in)	Interior Girders No. (Int. Only)	Interior Girders Web Thick. (in)	Exterior Girders Left Type	Exterior Girders Left Web Thick (in)	Exterior Girders Left Factor (ft)	Exterior Girders Right Type	Exterior Girders Right Web Thick (in)	Exterior Girders Right Factor (ft)	Overhangs Left Length (ft)	Overhangs Left Ext. Thick. (in)	Overhangs Left Int. Thick. (in)	Overhangs Right Length (ft)	Overhangs Right Ext. Thick. (in)	Overhangs Right Int. Thick. (in)
4	11	12 13 14 15	16 17	18 19 20 21	22 23 24 25	26 27 28 29	30 31 32 33	34 35 36 37	38 39 40 41	42 43	44 45	46	47 48	49 50 51	52	53 54	55 56 57	58 59	60 61	62 63	64 65	66 67	68 69

S/C 7681

Note: The shaded area above is for future application and is not used currently in the analysis.

Basic Section

Exterior Girders

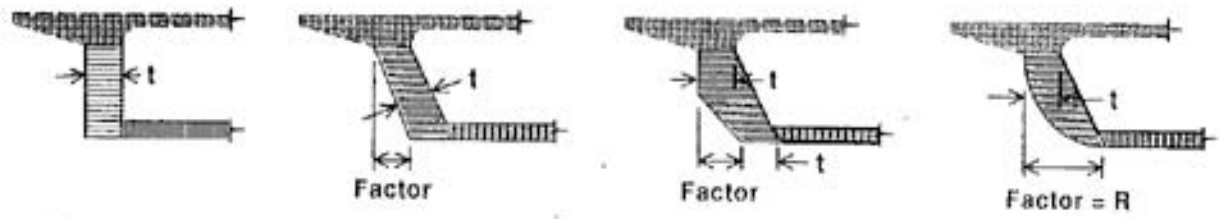

Type 0 Type 1 Type 2 Type 3

STATE OF CALIFORNIA • DEPARTMENT OF TRANSPORTATION

CALTRANS DESIGN SYSTEM

PRESTRESSED GIRDER ANALYSIS - SECTION BY PARTS

DS-D-0128 (REV. 11/97)

C

English

Section No.	S	Cross Section Location (ft)	Recall	Sign (+ or -)	Part Code	Part Dimensions: Vertical V or Depth D (ft)	Part Dimensions: Horizontal H (ft)	Ref. Pt. Cord.: X (ft)	Ref. Pt. Cord.: Y (ft)	Any Shape: Area (ft^2)	Any Shape: I_{xx} (ft^4)	Any Shape: I_{yy} (ft^4)	Store No.
4	11	12 13 14 15	16 17	18	19 20	21 22 23 24 25	26 27 28 29 30	31 32 33 34 35	36 37 38 39 40	41 42 43 44 45	46 47 48 49 50 51 52 53	54 55 56 57 58 59 60 61	62 63

S/C 7691

Note: The shaded area above is for future application and is not used currently in the analysis.

PART CODES:

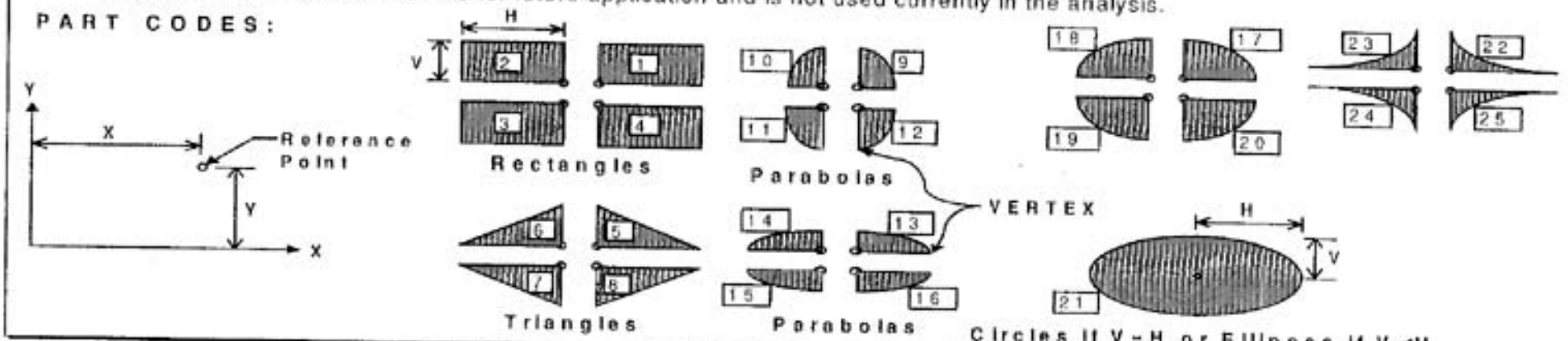

STATE OF CALIFORNIA ● DEPARTMENT OF TRANSPORTATION

CALTRANS DESIGN SYSTEM

PRESTRESSED GIRDER ANALYSIS - SECTION DIMENSIONS

DS-D-0025(REV. 11/97)

Symmetrical Sections

D

English

Trial No.	HXT (in)	HXB (in)	H4L (in)	H5L (in)	H6L (in)	H7L (in)	H8L (in)	H9L (in)	B3L (in)	W (in)	B4L (in)	B5L (in)	B6L (in)	B7L (in)	B8L (in)	S
3 4	11 12 13	14 15 16	17 18 19	20 21 22	23 24 25	26 27 28	29 30 31	32 33 34	35 36 37 38	39 40 41 42	43 44 45 46	47 48 49	50 51 52 53	54 55 56	57 58 59 60	61

S/C 1793

Notes:

"S" indicates the live load distribution factor.

"S"	L.L. Dist.
0	S/5.5
1	S/6.0
2	S/7.0

All dimensions in.

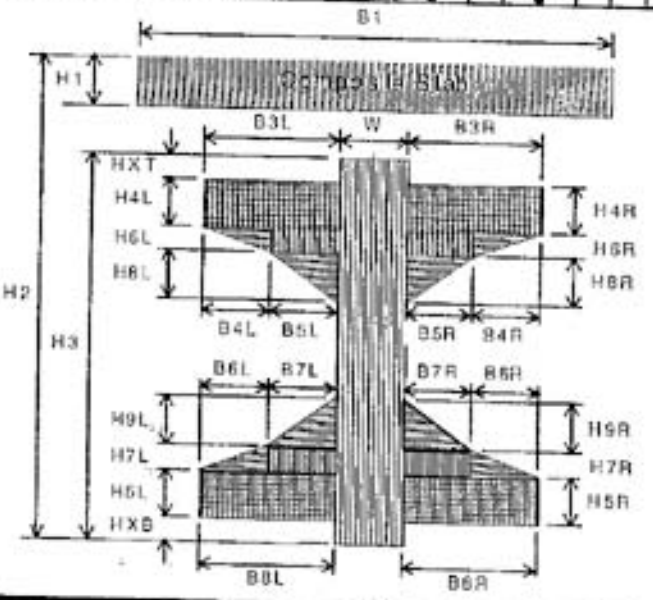

STATE OF CALIFORNIA ● DEPARTMENT OF TRANSPORTATION

CALTRANS DESIGN SYSTEM

PRESTRESSED GIRDER ANALYSIS - SECTION DIMENSIONS

DS-D-0025(REV. 11/97)

Unsymmetrical Sections

E

English

Trial No.	B3R (in)	B4R (in)	B5R (in)	B6R (in)	B7R (in)	B8R (in)	H4R (in)	H5R (in)	H6R (in)	H7R (in)	H8R (in)	H9R (in)
3 4	11 12 13 14	15 16 17 18	19 20 21	22 23 24 25	26 27 28	29 30 31 32	33 34 35	36 37 38	39 40 41	42 43 44	45 46 47	48 49 50

NOTES: All dimensions in.

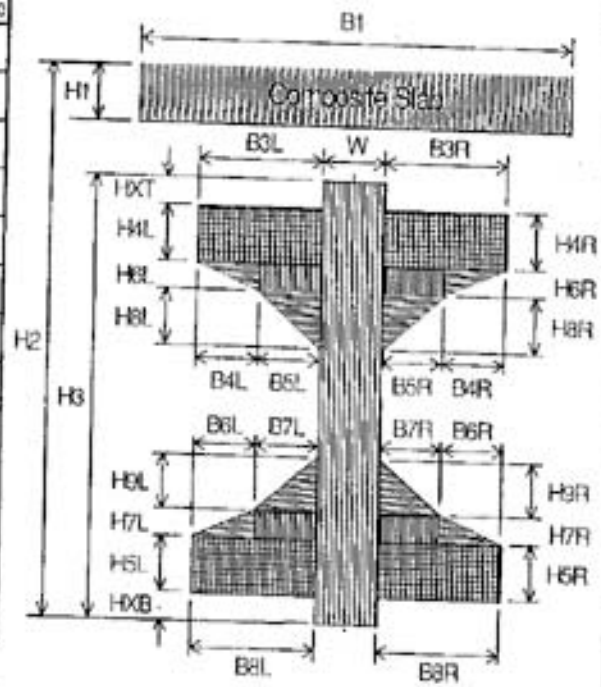

S/C 1794

STATE OF CALIFORNIA • DEPARTMENT OF TRANSPORTATION

CALTRANS DESIGN SYSTEM
PRESTRESSED GIRDER ANALYSIS

DS-D-0018(11/97)

A
Metric

Trial No.	Section No.	Girder Properties: Structure Depth (H2) (mm)	Girder Depth (H3) (mm)	Girder Spacing (S)** (mm)	PS f'c (MPa)	Span Length (L) (m)	Composite Slab: Thickn. (Hf) (mm)	Width (Bf) (mm)	Super (SLO) (%)	f'c (Mpa)	Prestress Data: Type	Pretension	f's (Mpa)	XCL (mm)	XND (mm)	Low Lax	Allowable Tension Factor	Final Prestress Force (kN)	Live Load Lanes	Moments: Note A DLM Applied to Initial Section (kN-m)	Note B DLM Applied to TFD Initial Section (kN-m)	Note C DLM Applied to Final Section (kN-m)	Note D (LL+1)M Applied to Final Section (kN-m)

S/C 1791

INSTRUCTIONS:

If an Office of Structures standard section is used, enter correct code from table at right in Type and omit any supplementary section sheets.
If other than a standard section is used, it must be reffered to by "Section No." If described by "By Parts" of "Superstructure Sections", it must be described on the "Section Dimensions" sheet.
Pretension: If the system is pretensioned, enter a 1. Leave column blank for post-tension.
XCL is the dimension from bottom of girder to CGS at centerline of span, XND at end.
If deflections are not desired, enter 99 in XND.
For low relaxation, enter a 1.
Allowable tension factor in tenths; 10 to 100%; 05 to 50%.

Code	Standard Type
I	"I" Girder

NOTES: (See Memo to Designers 20-16)

A Omit when simple span DLM is due to the described section.

B Omit when simple span DLM is due to the described final section. DLM should not include DLM of note A.

C Show the additional DLM applied to the final girder section.

D Omit when max H20-44 simple span moment is that for the described girder spacing (S) and span length (L). The distribution factor assumed is S/5.5. Omit Live Load Lanes to use S-over Distribution Factor.

** Girder spacing (S) is width of the structure subjected to the HS20-44 live load.

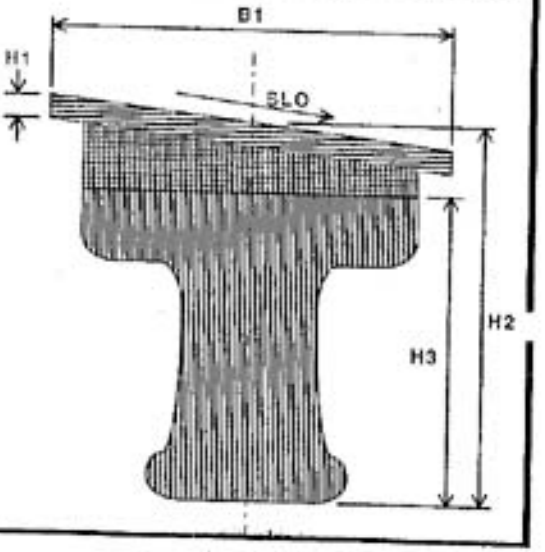

STATE OF CALIFORNIA • DEPARTMENT OF TRANSPORTATION

CALTRANS DESIGN SYSTEM

PRESTRESSED GIRDER ANALYSIS - SUPERSTRUCTURE SECTION

DS-D-0018 (REV. 11/97)

B

Metric

Section No.	S	Cross Section Location (m)	Recall	Ref. PL Coord X (m)	Ref. PL Coord Y (m)	S. S. Data Width E.D.-E.D. (m)	S. S. Data Depth (m)	Slab Data Top Thickness (mm)	Slab Data Bottom Thickness (mm)	Interior Girders No. (Int. Only)	Interior Girders Web Thick. (mm)	Exterior Girders Left Type	Exterior Girders Left Web Thick. (mm)	Exterior Girders Left Factor (m)	Exterior Girders Right Type	Exterior Girders Right Web Thick. (mm)	Exterior Girders Right Factor (m)	Overhangs Left Length (m)	Overhangs Left Ext. Thick. (mm)	Overhangs Left Int. Thick. (mm)	Overhangs Right Length (m)	Overhangs Right Ext. Thick. (mm)	Overhangs Right Int. Thick. (mm)

S/C 7681

Note: The shaded area above is for future application and is not used currently in the analysis.

Basic Section

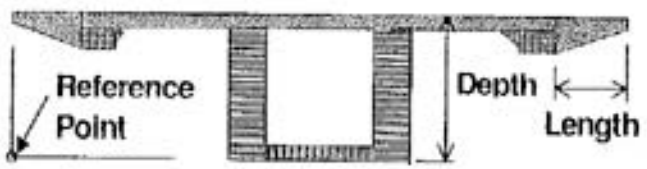

Exterior Girders

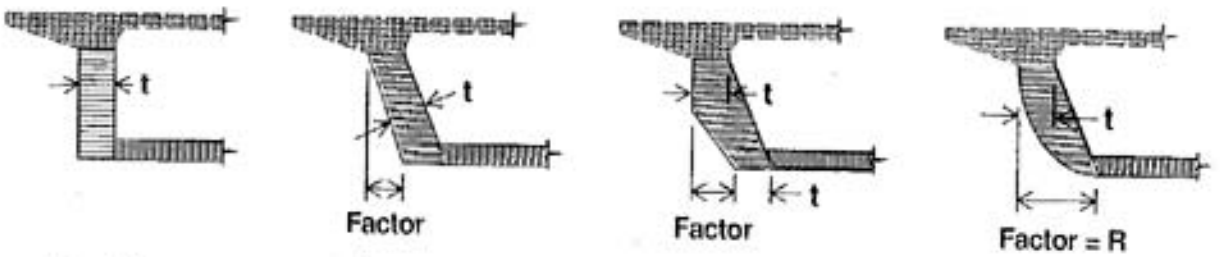

Type 0 Type 1 Type 2 Type 3

STATE OF CALIFORNIA • DEPARTMENT OF TRANSPORTATION

CALTRANS DESIGN SYSTEM
PRESTRESSED GIRDER ANALYSIS - SECTION BY PARTS

DS-D-0128 (REV. 11/97)

C
Metric

Section No.	S	Cross Section Location (m)	Recall	Sign (+ or -)	Part Code	Part Dimensions: Vertical V or Depth D (m)	Part Dimensions: Horizontal H (m)	Ref. Pt. Cord.: X (m)	Ref. Pt. Cord.: Y (m)	Any Shape: Area (m^2)	Any Shape: I_{xx} (m^4)	Any Shape: I_{yy} (m^4)	Sketch No.

S/C 7691

Note: The shaded area above is for future application and is not used currently in the analysis.

PART CODES:

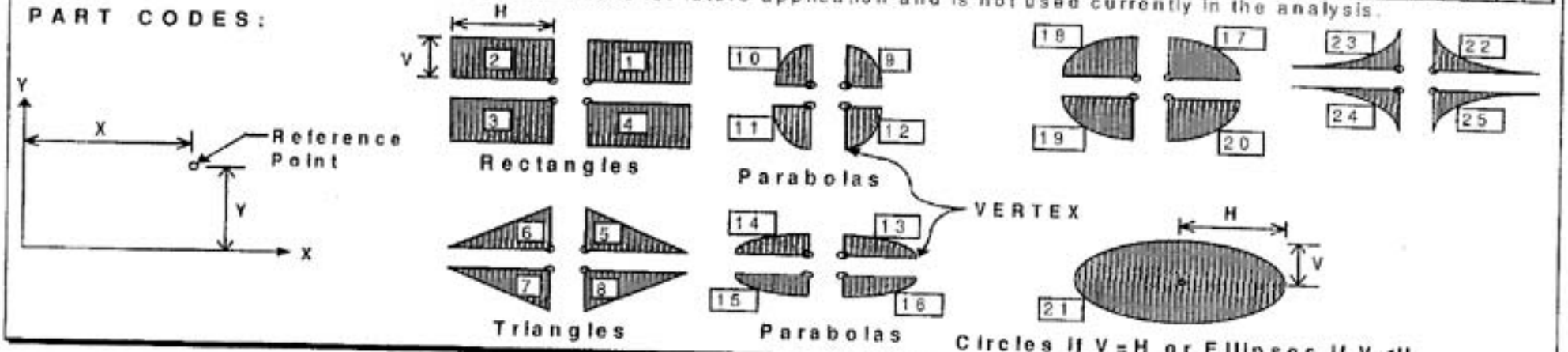

STATE OF CALIFORNIA • DEPARTMENT OF TRANSPORTATION

CALTRANS DESIGN SYSTEM

PRESTRESSED GIRDER ANALYSIS - SECTION DIMENSIONS

DS-D-0025 (REV. 11/97)

Symmetrical Sections

D

Metric

Trial No.	HXT (mm)	HXB (mm)	H4L (mm)	H5L (mm)	H6L (mm)	H7L (mm)	H8L (mm)	H9L (mm)	B3L (mm)	W (mm)	B4L (mm)	B5L (mm)	B6L (mm)	B7L (mm)	B8L (mm)	S

S/C 1793

Notes:

"S" indicates the live load distribution factor.

"S"	L.L. Dist.
0	S/5.5
1	S/6.0
2	S/7.0

All dimensions mm.

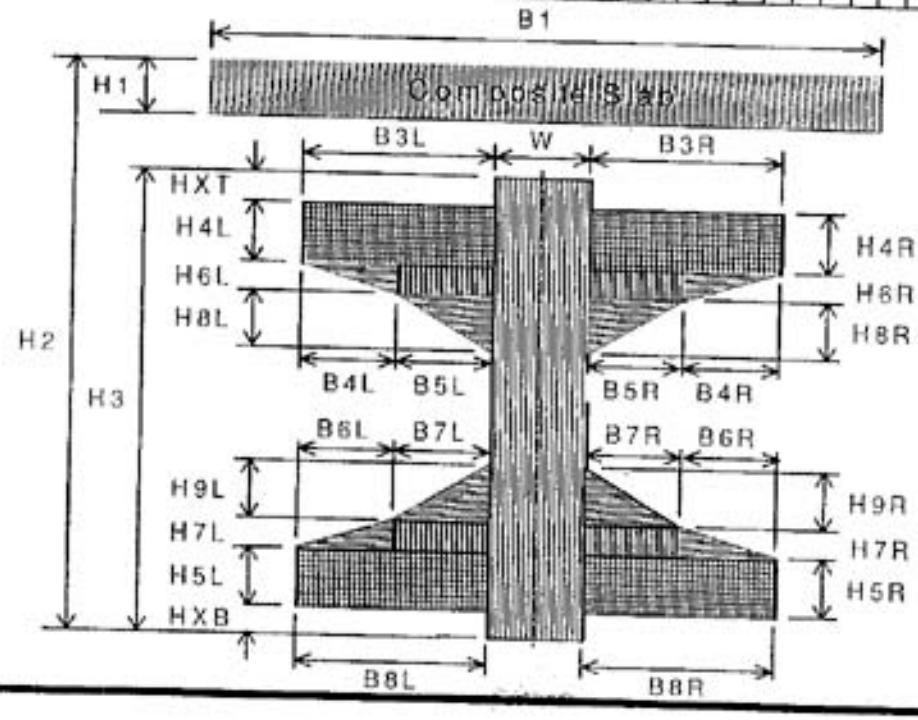

STATE OF CALIFORNIA • DEPARTMENT OF TRANSPORTATION

CALTRANS DESIGN SYSTEM
PRESTRESSED GIRDER ANALYSIS - SECTION DIMENSIONS

DS-D-0025 (REV. 11/97)

Unsymmetrical Sections

E
Metric

Trial No.	B3R (mm)	B4R (mm)	B5R (mm)	B6R (mm)	B7R (mm)	B8R (mm)	H4R (mm)	H5R (mm)	H6R (mm)	H7R (mm)	H8R (mm)	H9R (mm)

S/C 1794

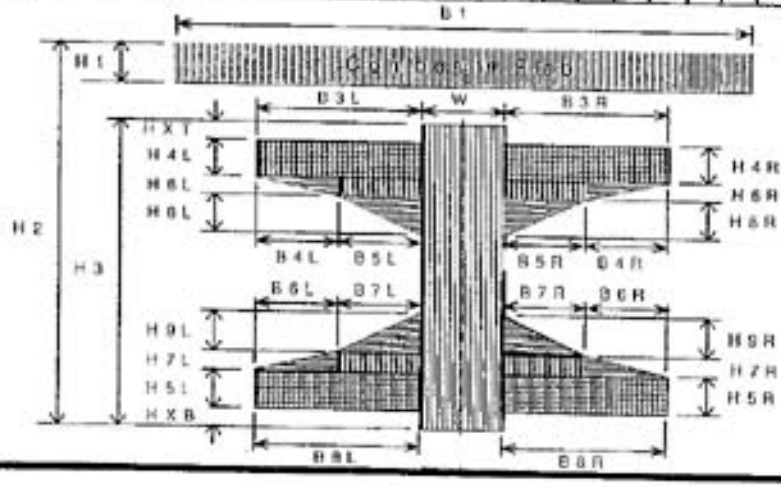

NOTES: All dimensions mm.