DIST.	COUNTY	ROUTE	KILOMETER POST TOTAL PROJECT	SHEET NO.	TOTAL SHEETS

Caltrans Metric

REGISTERED ENGINEER - CIVIL

PLANS APPROVAL DATE

REGISTERED PROFESSIONAL ENGINEER No. Exp. CIVIL STATE OF CALIFORNIA

The State of California or its officers or agents shall not be responsible for the accuracy or completeness of electronic copies of this plan sheet.

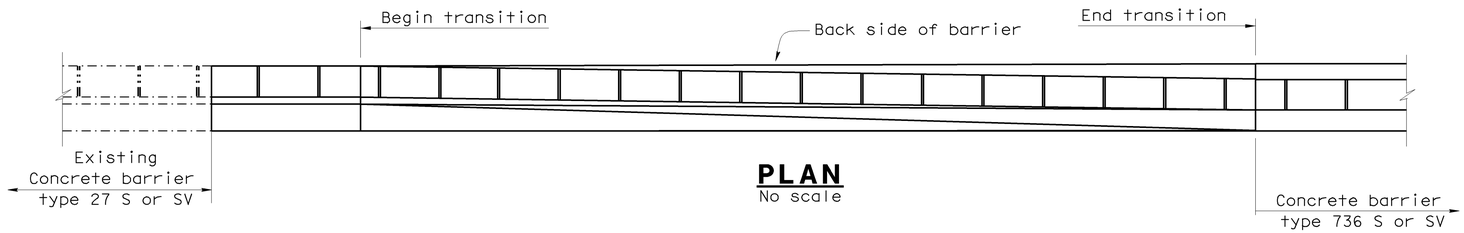

PLAN
No scale

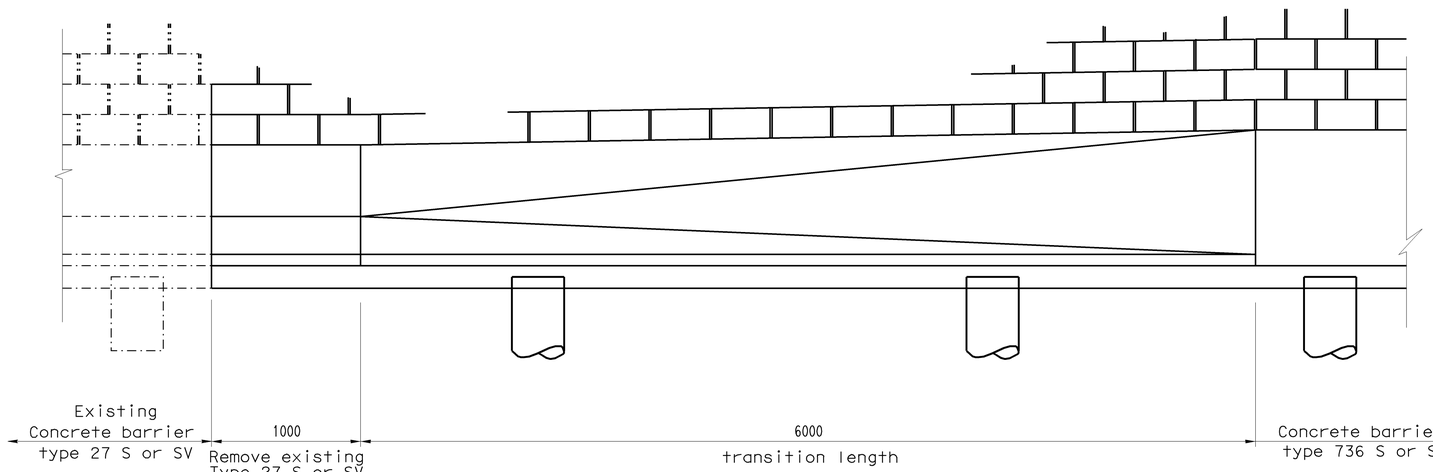

ELEVATION
No scale

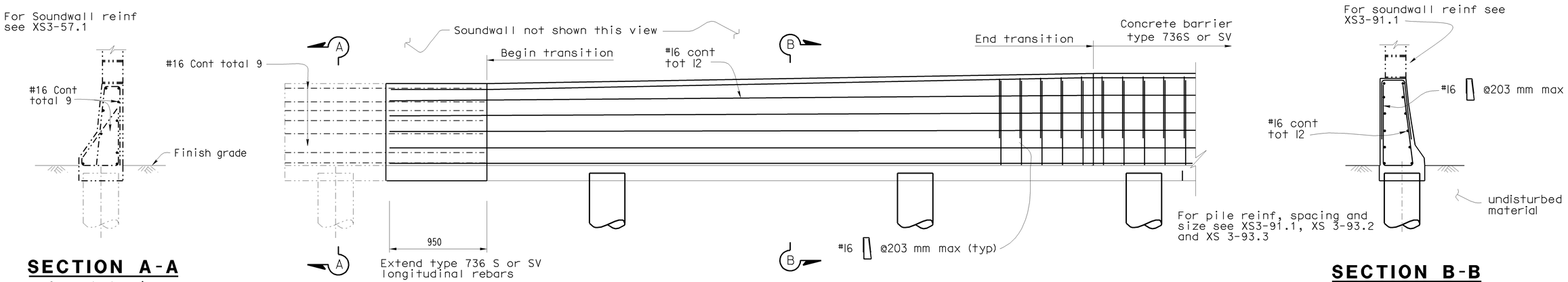

SECTION A-A
Concrete barrier
type 27S shown
No scale

ELEVATION
REINFORCEMENT DETAIL
No scale

SECTION B-B
No scale

ALL DIMENSIONS ARE IN
MILLMETERS UNLESS OTHERWISE SHOWN

STANDARD DRAWING				
RELEASE DATE 8/26/03	DESIGN	BY N ABDIN	CHECKED F ALTAMIRANO	RELEASED BY
	DETAILS	BY P C Wells	CHECKED N ABDIN	
FILE NO. xs16-120	SUBMITTED	BY J WOODY	DRAWING DATE 2/03	OFFICE CHIEF

STATE OF CALIFORNIA
DEPARTMENT OF TRANSPORTATION

DIVISION OF ENGINEERING SERVICES

BRIDGE NO.

KILOMETER POST

BARRIER-CONCRETE TYPE 736S/SV TRANSITION TO CONCRETE BARRIER TYPE 27S/SV

LAYOUT AND DETAILS

DS OSD 2147A (METRIC) (REV. X/XX/XX)

ORIGINAL SCALE IN MILLIMETERS FOR REDUCED PLANS 0 10 20 30 40 50 60 70 80 90 100

CU
EA

DISREGARD PRINTS BEARING EARLIER REVISION DATES

REVISION DATES (PRELIMINARY STAGE ONLY) SHEET OF

USERNAME => jsanchez

xs16-120.dgn

DATE PLOTTED => 16-JAN-2004 TIME PLOTTED => 15:12