# SECTION 5 - RETAINING WALLS

## Part A
## General Requirements and Materials

### 5.1 GENERAL

Retaining walls shall be designed to withstand lateral earth and water pressures, the effects of surcharge loads, the self-weight of the wall and in special cases, earthquake loads in accordance with the general principles specified in this section.

Retaining walls shall be designed for a service life based on consideration of the potential long-term effects of material deterioration on each of the material components comprising the wall. Permanent retaining walls should be designed for a minimum service life of 50 years. Temporary retaining walls should be designed for a minimum service life of 5 years.

The quality of in-service performance is an important consideration in the design of permanent retaining walls. Permanent walls shall be designed to retain an aesthetically pleasing appearance, and be essentially maintenance free throughout their design service life.

The Service Load Design Method shall be used for the design of retaining walls except where noted otherwise.

### 5.2 WALL TYPES

Retaining walls are generally classified as gravity, semi-gravity (or conventional), non-gravity cantilevered, and anchored. Gravity walls derive their capacity to resist lateral loads through dead weight of the wall. The gravity wall type includes rigid gravity walls, mechanically stabilized earth (MSE) walls, and prefabricated modular gravity walls. Semi-gravity walls are similar to gravity walls, except they rely on their structural components to mobilize the dead weight of backfill to derive their capacity to resist lateral loads. Non-gravity cantilevered walls rely on structural components of the wall partially embedded in foundation material to mobilize passive resistance to resist lateral loads. Anchored walls derive their capacity to resist lateral loads by their structural components being restrained by tension elements connected to anchors and possibly additionally by partial embedment of their structural components into foundation material. The anchors may be ground anchors (tiebacks), passive concrete anchors, passive pile anchors, or pile group anchors. The ground anchors are connected directly to the wall structural components whereas the other type anchors are connected to the wall structural components through tie rods. Within the wall types above, many of the retaining wall systems available are proprietary. Their use requires appropriate contractual requirements. See Figures 5.2-1 through 5.2-4 for examples.

#### 5.2.1 Selection of Wall Type

Selection of appropriate wall type is based on an assessment of the design loading, depth to adequate foundation support, presence of deleterious environmental factors, physical constraints of the site, cross-sectional geometry of the site both existing and planned, settlement potential, desired aesthetics, constructibility, maintenance, and cost.

##### 5.2.1.1 Rigid Gravity and Semi-Gravity Walls

Rigid gravity walls may be constructed of stone masonry, unreinforced concrete, or reinforced concrete. These walls can be used in both cut and fill applications. They have relatively narrow base widths. They are generally not used when deep foundations are required. They are most economical at low wall heights.

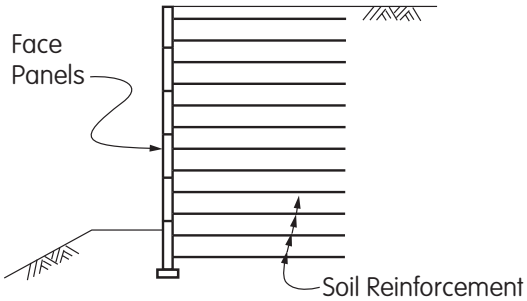


MSE Wall with Precast
Concrete Face Panels

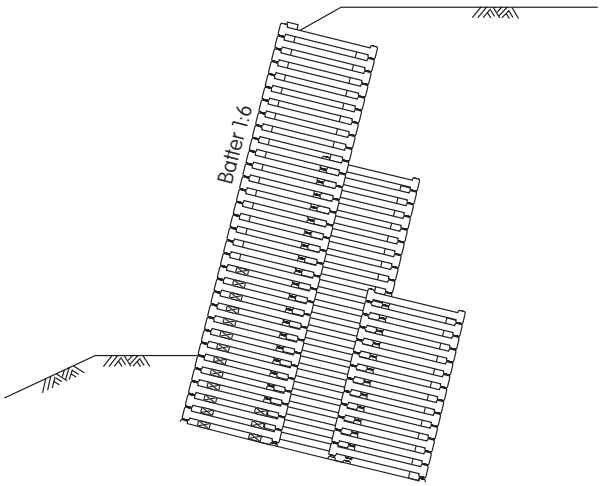


Precast Concrete Crib Wall

**Figure 5.2-1 Typical Gravity Retaining Walls**

Semi-gravity cantilever, counterfort and buttress walls are constructed of reinforced concrete. They can be used in both cut and fill applications. They have relatively narrow base widths. They can be supported by both shallow and deep foundations. The position of the wall stem relative to the footing can be varied to accommodate right-of-way constraints. These walls can support soundwalls, sign structures, and other highway features. They can accommodate drainage structures and utilities and span existing drainage structures and load sensitive

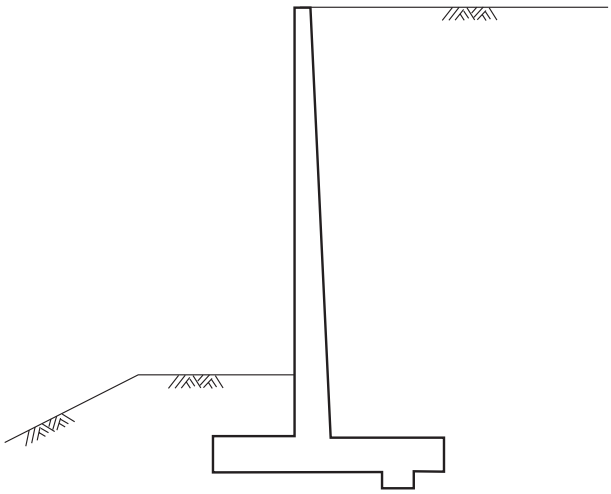

Reinforced Concrete Cantilever Wall

**Figure 5.2-2 Typical Semi-Gravity Retaining Walls**

utilities. They are most economical at low to medium wall heights.

Due to the rigidity of rigid gravity walls and semi-gravity walls they should only be used where their foundations can be designed to limit total and differential settlements to acceptable values.

### 5.2.1.2 Non-Gravity Cantilevered Walls

Non-gravity cantilevered walls are constructed of vertical structural members consisting of partially embedded soldier piles or continuous sheet piles. Soldier piles may be constructed with driven steel piles, treated timber, precast concrete or steel piles placed in drilled holes and backfilled with concrete or cast-in-place reinforced concrete. Continuous sheet piles may be constructed with driven precast prestressed concrete sheet piles or steel sheet piles. Soldier piles are faced with either treated timber, reinforced shotcrete, reinforced cast-in-place concrete, precast concrete or metal elements.

This type wall is suitable for both cut and fill applications but is most suitable for cut applications. Because of the narrow base width of this type wall it is suitable for

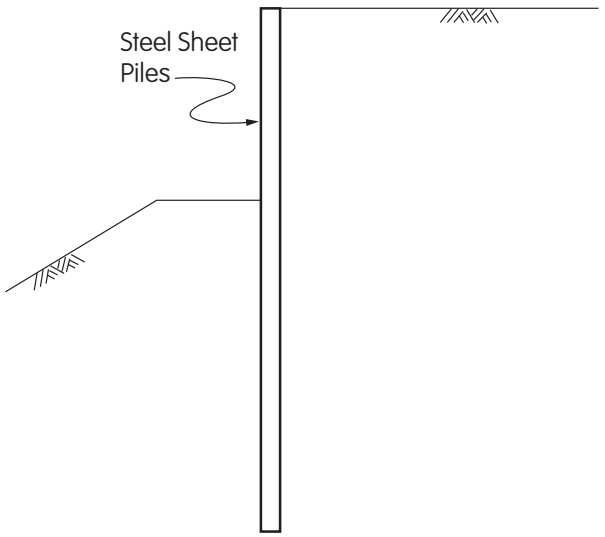


Continuous Vertical Wall Elements

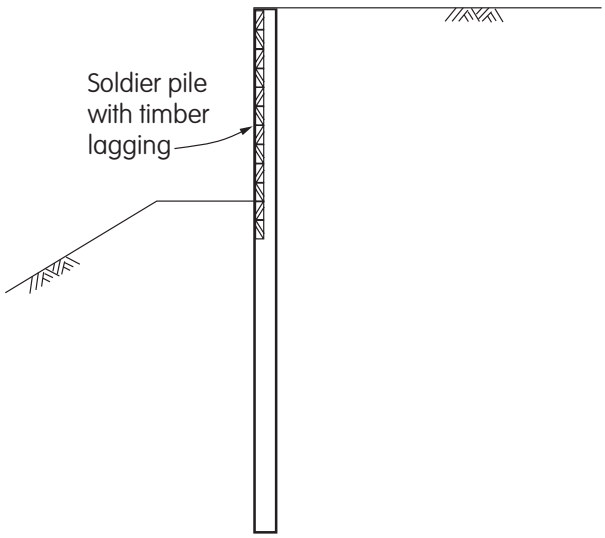


Discrete Vertical Wall Elements

**Figure 5.2-3 Typical Non-Gravity Cantilevered Retaining Walls**

situations with tight space constraints or right-of-way constraints.

This type wall depends on passive resistance of the foundation material and the moment resisting capacity of the vertical structural members for stability, therefore its maximum height is limited by the competence of the foundation material and the moment resisting capacity of the vertical structural members. Because this type wall depends on the passive resistance of foundation material, it should not be used where it is likely that foundation material will be removed in front of the wall during its service life.

The economical height of this type wall is generally limited to a maximum height of 20 feet or less.

### 5.2.1.3 Anchored Walls

Anchored walls are typically composed of the same elements as non-gravity cantilevered walls (Article 5.2.1.2), but derive additional lateral resistance from one or more levels of anchors. The anchors may be ground anchors (tiebacks) consisting of drilled holes with grouted in prestressing steel tendons extending from the wall face to an anchor zone located behind potential failure planes in the retained soil or rock mass. The anchors may also be structural anchors consisting of reinforced concrete anchors, driven or drilled in vertical pile anchors or a group of driven piles consisting of battered compression piles and vertical tension piles connected with a reinforced concrete cap. These anchors are located behind potential failure planes in the retained soil and are connected to the wall by horizontal tie rods.

Ground anchors are suitable for situations requiring one or more levels of anchors whereas anchors utilizing tie rods are typically limited to situations requiring a single level of anchors. The ground anchor tendons and tie rods must be provided with corrosion protection.

The distribution of lateral earth pressure on anchored walls is influenced by the method and sequence of wall construction and the anchor prestressing. Ground anchors are generally prestressed to a high percentage of their design tension force whereas anchors with tie rods are secured to the wall with little or no prestress force.

Anchored walls are typically constructed in cut situations in which construction proceeds from the top down to the base of the wall. For situations where fill is placed behind the wall special consideration in the design and construction is required to protect the ground anchors or

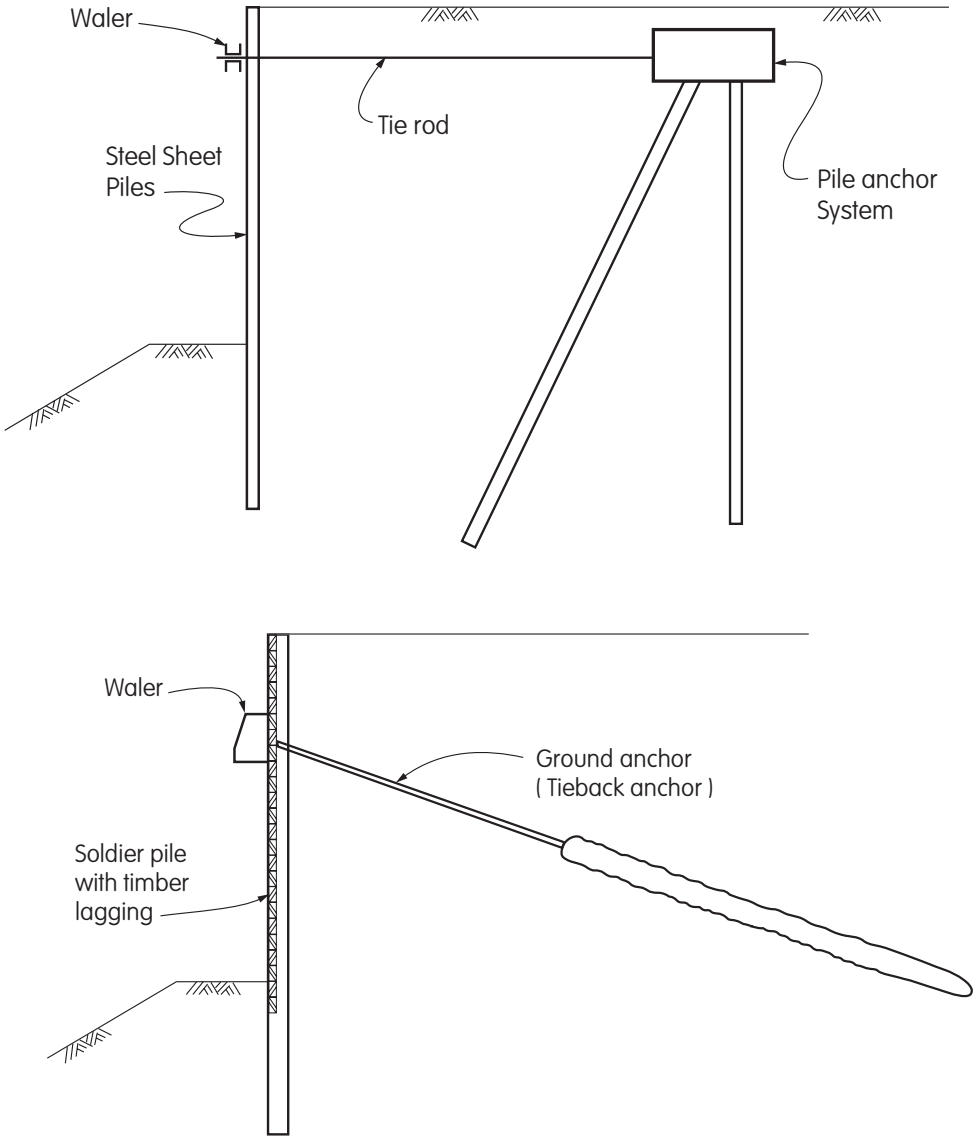


**Figure 5.2.4 Typical Anchored Retaining Walls**

tie rods from construction damage due to fill placement and fill settlement.

The vertical wall elements should extend below potential failure planes associated with the retained soil or rock mass. Where competent and stable foundation material is located at the base of the wall face, only minimal embedment of the wall may be required (soldier pileless design).

The long-term creep characteristics of the anchors should be considered in design. Anchors should not be located in soft clay or silt.

Anchored walls may be used to stabilize unstable sites. Provided adequate foundation material exists at the site for the anchors, economical wall heights up to 80 feet are feasible.

### 5.2.1.4 Mechanically Stabilized Earth Walls

Mechanically stabilized earth (MSE) walls use either metallic (inextensible) or geosynthetic (extensible) soil reinforcement in the soil mass, and vertical or near vertical facing elements. MSE walls behave as a gravity wall,

deriving their lateral resistance through the dead weight of the reinforced soil mass behind the facing.

MSE walls are typically used where conventional reinforced concrete retaining walls are considered, and are particularly well suited for sites where substantial total and differential settlements are anticipated. The allowable differential settlement is limited by the deformability of the wall facing elements within the plane of the wall face. In the case of precast concrete facing elements (panels), deformablitiy is dependent on the panel size and shape and the width of the joints between panels. This type wall can be used in both cut and fill applications. Because their base width is greater than that of conventional reinforced concrete walls they are most cost effective in fill applications. The practical height of MSE walls is limited by the competence of the foundation material at a given site.

MSE walls shall not be used where utilities or highway drainage must be located within the reinforced mass except that highway drainage may be placed within the reinforced soil mass if it runs vertically or perpendicular to the wall face.

MSE walls shall not be used where floodplain erosion or scour may undermine the reinforced soil mass unless the wall is founded at sufficient depth or adequate scour protection is provided to prevent the erosion or scour.

MSE walls shall not be used to support bridge abutments with shallow foundations nor pile supported bridge abutments where seismic displacements of the abutment would impose large forces on the wall face panels and the soil reinforcement to face panel connections. MSE walls may be used in front of pile supported bridge abutments where the seismic forces from the bridge superstructure are limited by elastomeric bearing pads supporting the bridge superstructure. These limited seismic forces shall be considered in the design of the MSE wall. The design service life shall be increased to 75 years for MSE walls in front of pile supported bridge abutments.

MSE walls shall not be used where aggressive environmental conditions exist unless environment specific studies of the long-term corrosion or degradation of the soil reinforcement are conducted.

MSE walls with metallic soil reinforcement may be used where deicing salts are used provided an impermeable cap is constructed at or near the ground surface above the soil reinforcement and adequate control of surface runoff is provided.

Where high concentrated loads must be supported at the wall face, such as those from highway sign foundations, a section of conventionally reinforced concrete wall may be constructed within the length of the MSE wall. This section of wall should be designed to retain both the lateral earth pressures and the concentrated loads.

Various aesthetic treatments can be incorporated in the precast concrete face panels.

### 5.2.1.5 Prefabricated Modular Walls

Prefabricated modular walls use stacked or interconnected structural elements, some of which utilize soil or rock fill, to resist earth pressures by acting as gravity retaining walls. Structural elements consisting of treated timber, or precast reinforced concrete are used to from a cellular system which is filled with soil to construct a crib wall, also steel modules are bolted together to form a similar system to construct a bin wall. Rock filled wire gabion baskets are used to construct a gabion wall. Solid precast concrete units or segmental concrete masonry units are stacked to form a gravity block wall.

Prefabricated modular walls may be used where conventional reinforced concrete walls are considered.

Steel modular systems shall not be used where aggressive industrial pollutants or other environmental conditions such as use of deicing salts or cathodic protection of nearby pipelines are present at a given site.

Traffic barriers shall not be placed at the face of this type wall but shall be placed in fill above the top of the wall.

The aesthetic appearance of some of these type walls is governed by the nature of the structural elements used. Those elements consisting of precast concrete may incorporate various aesthetic treatments.

This type wall is most economical for low to medium height walls.

### 5.2.2 Wall Capacity

Retaining walls shall be designed to provide adequate structural capacity with acceptable movements, adequate foundation bearing capacity with acceptable settlements, and acceptable overall stability of slopes adjacent to walls. The tolerable level of lateral and vertical deformations is controlled by the type and location of the wall structure and surrounding facilities.

#### 5.2.2.1 Bearing Capacity

The bearing capacity of wall foundation support systems shall be estimated using procedures described in Articles 4.4 – Spread Footings, 4.5 – Driven Piles, or 4.6 – Drilled Shafts, or other generally accepted theories. Such theories are based on soil and rock parameters measured by in-situ and /or laboratory tests.

#### 5.2.2.2 Settlement

The settlement of wall foundation support systems shall be estimated using procedures described in Articles 4.4, 4.5 or 4.6, or other generally accepted methods. Such methods are based on soil and rock parameters measured directly or inferred from the results of in-situ and/or laboratory tests.

#### 5.2.2.3 Overall Stability

As part of the design, the overall stability of the retaining wall, retained slope and foundation soil or rock shall be evaluated for all walls using limiting equilibrium methods of analysis. A minimum factor of safety of 1.3 shall be used for the design of walls for static loads, except that a minimum factor of safety of 1.5 shall be used for the design of walls which support bridge abutments, buildings, critical utilities, or other installations for which there is a low tolerance for failure. A minimum factor of safety of 1.0 shall be used for the design of walls for seismic loads. In all cases, the subsurface conditions and soil/rock properties of the wall site shall be adequately characterized through in-situ exploration and testing and /or laboratory testing as described in Article 5.3 – Subsurface Exploration And Testing Programs. Special exploration, testing and analysis may be required for retaining walls constructed over soft deposits or for sites where excess pore water pressures may develop during a seismic event.

Seismic forces applied to the mass of the slope shall be based on a horizontal seismic acceleration coefficient, $k_h$, equal to one-third of, $A$, the expected peak acceleration produced by the Maximum Credible Earthquake on bedrock at the site as defined in the Caltrans Seismic Hazard Map. Generally the vertical seismic coefficient, $k_v$, is considered to equal zero.

For seismic loads, if it is determined that the factor of safety for the slope is less than 1.0 using one-third of the peak bedrock acceleration, procedures for estimating earthquake induced deformations such as the Newmarks' Method may be used provided that the retaining wall and any supported structure can tolerate the resulting deformations.

#### 5.2.2.4 Tolerable Deformations

Tolerable vertical and lateral deformation criteria for retaining walls shall be developed based on the function and type of wall, anticipated service life, and consequences of unacceptable movements (i.e., both structural and aesthetic).

Allowable total and differential vertical deformations for a particular retaining wall are dependent on the ability of the wall to deflect without causing damage to the wall elements or exhibiting unsightly deformations. The total and differential vertical deformation of a retaining wall should be small for rigid gravity and semi-gravity retaining walls, and for soldier pile walls with cast-in-place concrete facing. For walls with inclined tieback anchors, any downward movement can cause significant destressing of the anchors.

MSE walls can tolerate larger total and differential vertical defections than rigid walls. The amount of total and differential vertical deflection that can be tolerated depends on the wall facing material, configuration, and timing of facing construction. A cast-in-place concrete facing has the same vertical deformation limitations as the more rigid retaining wall systems. However, the cast-in-place facing of an MSE wall can be specified to be constructed after an appropriate settlement period so that vertical as well as horizontal deformations have time to occur. An MSE wall with welded wire or geosynthetic facing can tolerate the most deformation. An MSE wall

with multiple precast concrete face panels cannot tolerate as much vertical deformations as flexible welded wire or geosynthetic facings because of potential damage to the precast face panels and unsightly face panel separation.

Horizontal movements resulting from outward rotation of the wall or resulting from the development of internal equilibrium between the loads applied to the wall and the internal structure of the wall must be limited to prevent overstress of the structural wall facing and to prevent the wall face batter from becoming negative. In general, if vertical deformations are properly controlled, horizontal deformations will likely be within acceptable limits. For MSE walls with extensible reinforcements, reinforcement serviceability criteria, the wall face batter, and the facing type selected (i.e. the flexibility of the facing) will influence the horizontal deformation criteria required.

Vertical wall movements shall be estimated using conventional settlement computational methods (see Articles 4.4, 4.5, and 4.6). For gravity and semi-gravity walls, lateral movement results from a combination of differential vertical settlement between the heel and the toe of the wall and the rotation necessary to develop active earth pressure conditions (see Table C5.5.1-1). If the wall is designed for at-rest earth pressure conditions, the deflections in Table C5.5.1-1 do not need to be considered.

Where a wall is used to support a structure, tolerable movement criteria shall be established in accordance with Articles 4.4, 4.5 and 4.6. Where a wall supports soil on which an adjacent structure is founded, the effects of wall movements and associated backfill settlement on the adjacent structure shall be evaluated.

### 5.2.3 Soil, Rock, and Other Problem Conditions

Geologic and environmental conditions can influence the performance of retaining walls and their foundations, and may require special consideration during design. To the extent possible, the presence and influence of such conditions shall be evaluated as part of the subsurface exploration program. A representative, but not exclusive, listing of problem conditions requiring special consideration is presented in Table 4.2.3A for general guidance.

## 5.3 SUBSURFACE EXPLORATION AND TESTING PROGRAMS

The elements of the subsurface exploration and testing programs shall be based on the specific requirements of the project and prior experience with the local geological conditions.

### 5.3.1 General Requirements

As a minimum, the subsurface exploration and testing programs shall define the following, where applicable:

- Soil strata:
  - Depth, thickness, and variability
  - Identification and classification
  - Relevant engineering properties (i.e., natural moisture content, Atterberg limits, shear strength, compressibility, stiffness, permeability, expansion or collapse potential, and frost susceptibility)
  - Relevant soil chemistry, including pH, resistivity, cloride, sulfate, and sulfide content

- Rock strata:
  - Depth to rock
  - Identification and classification
  - Quality (i.e., soundness, hardness, jointing and presence of joint filling, resistance to weathering, if exposed, and solutioning)
  - Compressive strength (i.e., uniaxial compression, point load index)
  - Expansion potential

- Ground water elevation, including seasonal variations, chemical composition, and pH (especially important for anchored, non-gravity cantilevered, modular, and MSE walls) where corrosion potential is an important consideration

- Ground surface topography

- Local conditions requiring special consideration (i.e., presence of stray electrical currents)

Exploration logs shall include soil and rock strata descriptions, penetration resistance for soils (i.e., SPT or $q_c$), and sample recovery and RQD for rock strata. The drilling equipment and method, use of drilling mud, type

of SPT hammer (i.e., safety, donut, hydraulic) or cone penetrometer (i.e., mechanical or electrical), and any unusual subsurface conditions such as artesian pressures, boulders or other obstructions, or voids shall also be noted on the exploration logs.

### 5.3.2 Minimum Depth

Regardless of the wall foundation type, borings shall extend into a bearing layer adequate to support the anticipated foundation loads, defined as dense or hard soils, or bedrock. In general, for walls which do not utilize deep foundation support, subsurface explorations shall extend below the anticipated bearing level a minimum of twice the total wall height. Greater depths may be required where warranted by local conditions. Where the wall is supported on deep foundations and for all non-gravity walls, the depth of the subsurface explorations shall extend a minimum of 20 feet below the anticipated pile, shaft, or slurry wall tip elevation. For piles or shafts end bearing on rock, or shafts extending into rock, a minimum of 10 feet of rock core, or a length of rock core equal to at least three times the shaft diameter, which ever is greater, shall be obtained to insure that the exploration has not been terminated on a boulder and to determine the physical characteristics of the rock within the zone of foundation influence for design.

### 5.3.3 Minimum Coverage

A minimum of one soil boring shall be made for each retaining wall. For retaining walls over 100 feet in length, the spacing between borings should be not longer than 200 feet. In planning the exploration program, consideration should be given to placing borings inboard and outboard of the wall line to define conditions in the scour zone at the toe of the wall and in the zone behind the wall to estimate lateral loads and anchorage capacities.

### 5.3.4 Laboratory Testing

Laboratory testing shall be performed as necessary to determine engineering characteristics including unit weight, natural moisture content, Atterberg limits, gradation, shear strength, compressive strength and compressibility. In the absence of laboratory testing, engineering characteristics may be estimated based on field tests and/or published property correlations. Local experience should be applied when establishing project design values based on laboratory and field tests.

### 5.3.5 Scour

The probable depth of scour shall be determined by subsurface exploration and hydraulic studies. Refer to Article 1.3.2 for general guidance regarding hydraulic studies and design.

## 5.4 NOTATIONS

The following notations apply for design of retaining walls:

$a$ = width of strip load (FT); 5.5.5.10

$a$ = length of the sides of a square cell or the length of the short side of a rectangular cell (FT); 5.10.4

$a'$ = length of side of rectangular wall cell used for determining, $R_b$ (FT); 5.10.4

$A$ = the expected peak acceleration produced by the maximum credible earthquake on bedrock at the site as defined in the Caltrans Seismic Hazard Map (DIM); 5.2.2.3

$A_{corrosion\ loss}$ = cross-sectional area of soil reinforcement lost due to corrosion over the design service life ($FT^2$); 5.9.3

$A_{gross}$ = cross sectional area of transverse grid element before any sacrificial steel loss due to corrosion ($FT^2$); 5.9.3

$A_{net}$ = cross sectional area of transverse grid element at end of design service life after design sacrificial steel loss has occurred ( $FT^2$); 5.9.3

$A_t$ = tributary area of wall face at level of soil reinforcement ($FT^2$); 5.9.3

$A_t$ = tributary area of wall face used in determining, $T_{max}$ ($FT^2$); 5.9.3

$b$ = actual width of embedded discrete vertical wall element below design grade in plane of wall (FT); 5.5.5.6, 5.7.6

$b$ = distance from pressure surface to near edge of strip load (FT); 5.5.5.10

$b$ = actual width of concrete anchor (FT); 5.8.6.2.1

$b$ = width of soil reinforcement under consideration (FT); 5.9.3.5.2

$b$ = length of the long side of a rectangular cell (FT); 5.10.4

$b'$ = effective width of embedded portion of vertical wall elements (FT); 5.5.5.6, 5.7.6

$b'$ = effective width of concrete anchor (FT); 5.8.6.2.1

$b'$ = effective width of anchor pile (FT); 5.8.6.2.2

$b_c$ = indicator of batter of compression piles (DIM); 5.8.6.2.3

$b_f$ = width of footing overwhich horizontal force, $P_H$, is distributed (FT); 5.5.5.10

$b_t$ = indicator of batter of tension piles (DIM); 5.8.6.2.3

$b_t$ = width of tributary area, $A_t$ (FT); 5.9.3

$B$ = notional slope of backfill (DEG) ; 5.5.5.5

$B$ = width of footing (FT); 5.5.5.10

$B$ = width of wall footing (FT); 5.6.4

$B$ = wall base width (FT); 5.9.1

$B$ = width of soil reinforcement (FT); 5.9.3

$B$ = length of transverse grid elements of soil reinforcement (FT);5.9.3

$B'$ = width of wall footing actually in compression ($B' = B\text{-}2e$) (FT); 5.6.4

$B'$ = effective base width (FT); 5.9.2

$B_e$ = width of excavation in front of wall (FT); 5.5.5.7.2b

$B_k$ = distance from back face of footing key to the back face or heel of wall footing (FT); 5.6.3,5.6.4

$B_n$ = base width of nth tier of tiered wall with the bottom tier being the first tier ( $n=1$) (FT); 5.10.1

$B_1$ = distance from toe of footing to front face of footing key (FT )5.6.4

$c$ = unit cohesion (KSF); 5.5.5.4

$c$ = cohesion of foundation soil (KSF); 5.6.4

$c_a$ = adhesion between wall footing and foundation soil or rock (KSF); 5.6.4

$C$ = overall soil reinforcement surface area geometry factor(DIM); 5.9.3

$C_p$ = axial force in compression pile (KIPS); 5.8.6.2.3

$C_{ph}$ = horzontal component of axial force in a battered compression pile (KIPS); 5.8.6.2.3

$CR_{CR}$ = long-term connection strength reduction factor to account for reduced ultimate strength resulting from connection (DIM); 5.9.3.5.2

$d$ = depth of potential base failure surface below the design grade in front of wall (FT); 5.5.5.7.2b

$d$ = distance from center of width, $b_f$ , to back of wall or pressure surface (FT); 5.5.5.10

$d$ = depth of concrete anchor cover (FT) ; 5.8.6.2.1

$d$ = distance from finished grade to top of anchor pile (FT) ;5.8.6.2.2

$d$ = diameter of ground anchor drill hole (FT); 5.8.6.3

$d_{bnet}$ = net diameter of transverse grid element after consideration for corrosion loss (FT); 5.9.3

$D$ = depth of embedment of concrete anchor (FT); 5.8.6.2.1

$D$ = embedment from finished grade to be used for anchor pile (FT); 5.8.6.2.2

$D$ = depth of embedment of vertical wall elements for non-gravity cantilevered walls (FT); 5.7.1

$D$ = depth of embedment of vertical wall elements for anchored walls (FT); 5.8.6.3

$D_k$ = depth of wall footing key (FT); 5.6.4

$D_o$ = calculated embedment depth of vertical wall elements (FT); 5.5.5.6, 5.7.1, 5.7.6

$D_o$ = embedment of vertical wall elements that provides a factor of safety equal to 1.0 against rotation about level of tie rod of an anchored wall (DIM); 5.8.6.2

$D_o$ = calculated embedment from finished grade of anchor pile (FT); 5.8.6.2.2

$D_1$ = effective width for determining vertical stress at any depth due to applied vertical load (FT); 5.5.5.10

$e$ = eccentricity of resultant force acting on footing base from center of footing (FT); 5.6.4

$e$ = eccentricity of resultant force (DIM); 5.9.2

$e$ = base of natural logarithms (DIM); 5.10.4

$e'$ = eccentricity of vertical load on footing (FT); 5.5.5.10

$e_{max}$ = maximum allowable eccentricity of the resultant force acting on the base of the wall (FT); 5.9.2

$F$ = force at tip of embedded vertical wall elements required to provide equilibruim of horizontal forces (KIPS); 5.5.5.6

$F$ = total force acting on anchor pile at depth, $D_o$, required to provide equilibrium of horizontal forces acting on the anchor pile (KIPS); 5.8.6.2.2

$F_a$ = allowable tensile stress for steel soil reinforcement (KSI); 5.9.3

$F_{AC}$ = pullout anchorage factor of soil reinforcement (DIM); 5.9.3

$F_y$ = yield strength of steel (KSI); 5.9.3

$F^*$ = pullout resistance factor for soil reinforcement (DIM); 5.9.3

$FS$ = factor of safety (DIM); 5.6.4

$FS$ = global safety factor (DIM); 5.9.3.4.2.1

$FS_{po}$ = factor of safety against pullout of wall modules above the level under consideration (DIM); 5.10.3

$FS_{po}$ = factor of safety against pullout for level of soil reinforcement under consideration (DIM); 5.9.3

$FS_{OT}$ = factor of safety against overturning (DIM); 5.7.6

$FS_R$ = factor of safety against rotation about level of tie rod of an anchored wall (DIM); 5.8.6.2

$FS_{SL}$ = factor of safety against sliding (DIM); 5.6.4

$FS_T$ = factor of safety against translation (DIM); 5.8.6.3

$h$ = height of pressure surface at back of wall (FT); 5.5.5.8,5.6.4

$h$ = actual height of concrete anchor(FT); 5.5.6.2.1

$h$ = height of pressure surface (FT); C5.5.5.5.1

$h'$ = height from intersection of active and passive failure surfaces to ground surface (FT); 5.8.6.2.1

$h_{eg}$ = equivalent height of soil for vehicular load (FT); 5.5.5.10

$h_n$ = height of nth tier of tiered wall with the bottom tier being the first tier ( $n=1$) ( FT); 5.10.1

$h_t$ = height of tributary area, $A_t$ (FT); 5.9.3

$H$ = design height of wall (FT); C5.5.1, 5.7.1

$H$ = wall design height (FT); 5.6.4

$H_n$ = vertical distance between, $n^{th}$ level, and, $(n-1)^{th}$ level of ground anchors (FT); 5.8.6.3

$H_{n+1}$ = distance from design grade at bottom of wall to lowermost level of anchors (FT); 5.5.5.7

$H_1$ = distance from ground surface at top of wall to uppermost level of anchors (FT); 5.5.5.7

$H_1$ = distance from finished grade to level at which, $T_{ult}$, acts on anchor pile (FT); 5.8.6.2.2

$H_1$ = distance from finished grade to level at which, $T_{ult}$, acts on pile anchor (FT); 5.8.6.2.3

$H_1$ = distance from finished grade at top of wall to top level of ground anchors (FT); 5.8.6.3

$H_1$ = vertical distance from bottom of wall to point of intersection of finished grade behind wall face and failure surface for determining internal stability for walls with inextensible soil reinforcement (FT); 5.9.3

$k$ = coefficient of lateral earth pressure (DIM); 5.5.5.1

$k$ = ratio of lateral to vertical pressure in wall cell fill (DIM);5.10.4

$k_a$ = coefficient of active lateral earth pressure (DIM); 5.5.5.3

$k_h$ = horizontal seismic acceleration coefficient (DIM); 5.2.2.3

$k_o$ = coefficient of at-rest lateral earth pressure (DIM); 5.5.5.2

$k_p$ = coefficient of passive lateral earth pressure (DIM); 5.5.5.4

$k_r$ = lateral earth pressure coefficient of reinforced soil mass (DIM); 5.9.1

$k_s$ = coefficient of lateral earth pressure due to surcharge (DIM); 5.5.5.10

$k_v$ = vertical seismic acceleration coefficient (DIM); 5.2.2.3

$L$ = length of soil reinforcement (FT); 5.5.5.8, 5.9.1

$L$ = length of footing (FT); 5.5.5.10

$L_a$ = distance from back of wall facing to failure surface for internal stability analysis(FT); 5.9.1

$L_b$ = ground anchor bond length (FT); 5.8.6.3

$L_e$ = distance from failure surface for internal stability analysis to rearmost end of soil reinforcement (FT); 5.9.1

$M_n$ = nominal moment strength of reinforced concrete crib wall member (KIP-FT); 5.10.4

$M_p$ = plastic moment strength of reinforced concrete crib wall member (KIP-FT); 5.10.4

$MARV$ = minimum average roll value for, $T_{ult}$ (KIPS/FT); 5.9.3

$N$ = number of transverse grid elements of soil reinforcement within length, $L_e$ (DIM); 5.9.3

$N_S$ = stability number (DIM); 5.5.5.6

$OCR$ = overconsolidation ratio (DIM); 5.5.5.2

$p$ = lateral pressure in wall cell fill at depth, $y$ (KSF); 5.10.4

$p$ = basic lateral earth pressure (KSF); 5.5.5.1

$p$ = load intensity of strip load parallel to wall (KSF); 5.5.5.10

$p_a$ = maximum ordinate of lateral earth pressure diagram (KSF); 5.5.5.7

$p_a$ = lateral pressure in wall cell fill next to the short side of a rectangular cell at depth, $y$ (KSF); 5.10.4

$p_b$ = lateral pressure in wall cell fill next to the long side of a rectangular cell at depth, $y$ (KSF); 5.10.4

$p_p$ = passive lateral earth pressure (KSF); 5.5.5.4

$P$ = horizontal earth pressure resultant acting on the pressure surface at back of wall (KIPS)/FT); 5.5.5.10

$P$ = vertical point load (KIPS); 5.5.5.10

$P$ = tangential component of force on wall footing (KIPS); 5.6.4

$P_a$ = active lateral earth pressure resultant per unit width of wall (KIPS/FT); 5.5.5.3

$P_a$ = active lateral earth pressure resultant per length of wall under consideration determined by Rankine theory (KIPS); 5.5.5.8

$P_a$ = lateral earth pressure resultant per unit width of wall acting on pressure surface at back of wall (KIPS/FT); 5.6.4

$P_a$ = total lateral active earth pressure acting on an anchor pile over height, $D_o$, and effective pile width, $b'$ (KIPS); 5.8.6.2.2

$P_a$ = total lateral active earth pressure acting on height, $D$, per foot width of anchor (KIPS/FT); 5.8.6.2.1

$P_a$ = design lateral pressure acting on the tributary area of the face of the wall modules above the level under consideration (KIPS); 5.10.3

$P_a'$ = total lateral active earth pressure acting on height, $h$, per foot width of anchor or anchor pile (KIPS/FT); 5.8.6.2.1, 5.8.6.2.2

$P_{ah}$ = horizontal component of, $P_a$ (KIPS/FT); 5.6.4

$P_{av}$ = vertical component of, $P_a$ (KIPS/FT); 5,6,4

$P_h$ = horizontal component of, $P_a$ (KIPS); 5.5.5.8

$P_H$ = horizontal force at base of continuous footing per unit length of footing (KIPS/FT); 5.5.5.10

$P_{max}$ = maximum resisting force between wall footing base and foundation soil or rock against sliding failure (KIPS); 5.6.4

$P_N$ = normal component of passive lateral earth pressure resultant per unit width of wall (KIPS/FT); 5.5.5.4

$P_o$ = at-rest lateral earth pressure resultant per unit width of wall acting on the toe of the wall footing (KIPS/FT); 5.6.4

$P_p$ = passive lateral earth pressure resultant per unit width of wall (KIPS/FT); 5.5.5.4

$P_p$ = passive lateral earth pressure, not to exceed 50 percent of the available passive lateral earth pressure (KIPS); 5.6.4

$P_p$ = total lateral passive earth pressure acting on height, $D$, per foot width of anchor (KIPS/FT); 5.8.6.2.1

$P_p$ = total lateral passive earth pressure acting on an anchor pile over height, $D_o$, and effective pile width, $b'$ (KIPS); 5.8.6.2.2

$P_p'$ = total lateral passive earth pressure acting on height, $h$, per foot width of anchor or anchor pile (KIPS/FT); 5.8.6.2.1, 5.8.6.2.2

$P_r$ = resultant force of unifomly distributed lateral resisting pressure per unit width of wall acting over the depth of footing key required to provide equilibrium to force, $P$ (KIPS/FT); 5.6.4

$P_r$ = design lateral pressure from retained fill (KSF); 5.10.4

$P_T$ = tangential component of passive lateral earth pressure resultant per unit width of wall (KIPS/FT); 5.5.5.4

$P_{Total}$ = total lateral load per foot of wall required to be applied to the wall face to provide a factor

of safety equal to 1.3 for the retained soil mass when stability is analyzed using an appropriate limiting equilibrium method of analysis (KIPS/FT); 5.5.5.7

$P_v$ = vertical component of, $P_a$ (KIPS) ; 5.5.5.8

$P_v$ = vertical load per unit length of continuous footing or strip load (KIPS/FT); 5.5.5.10

$P_v'$ = vertical load on isolated rectangular footing or point load (KIPS); 5.5.5.10

$q$ = vertical pressure in wall cell fill at depth , $y$ (KSF); 5.10.4

$q_a$ = vertical pressure in wall cell fill next to short side of rectangular cell (KSF); 5.10.4

$q_b$ = vertical pressure in wall cell fill next to long side of rectangular cell (KSF); 5.10.4

$q_c$ = cone penetration resistance (KSF); 5.3.1

$q_s$ = uniform surcharge applied to the wall backfill surface within the limits of the active failure wedge (KSF); 5.5.5.10

$Q$ = normal component of force on wall footing (KIPS); 5.6.4

$Q_a$ = allowable ground anchor pullout resistance (KIPS); 5.8.6.3

$Q_1$ = normal component of force on wall footing within distance, $B_1$ (KIPS); 5.6.4

$Q_2$ = normal component of force on wall footing within distance,( $B$-$B_1$) (KIPS); 5.6.4

$r$ = $(x^2 + y^2)^{0.5}$ (FT); 5.5.5.10

$R$ = reduction factor for determination, of $P_p$, using Figures 5.5.5.4-1 and 5.5.5.4-2 (DIM); 5.5.5.4

$R$ = earth pressure resultant per unit width of wall acting on failure surface of failure wedge (KIPS/FT); 5.5.5.5

$R$ = design reaction force at bottom of wall to be resisted by embedded portion of wall (KIPS)/FT); 5.5.5.7

$R$ = radial distance from point of load application to the point on the back of the wall at which, $D_{ph}$, is being determined (FT); 5.5.5.10

$R$ = reaction at assumed point of zero moment in verticalwall elements at or near bottom of anchored wall (KIPS); 5.8.6.3

$R$ = hydraulic radius of wall cell (FT); 5.10.4

$R_a$ = hydraulic radius for determining pressures next to short side of rectangular wall cell (FT); 5.10.4

$R_b$ = hydraulic radius for determining pressures next to long side of rectangular wall cell (FT); 5.10.4

$R_{po}$ = pullout resistance of soil reinforcement for level of soil reinforcement under consideration (KIPS); 5.9.3

$R_{po}$ = pullout resistance of wall modules above the level under consideration (KIPS); 5.10.3

$RF$ = combined strength reduction factor to account for potential long-term degradation (DIM); 5.9.3

$RF_{CR}$ = strength reduction factor to prevent long -term creep rupture of soil reinforcement (DIM); 5.9.3

$RF_D$ = strength reduction factor to prevent rupture of soil reinforcement due to chemical and biological degradation (DIM); 5.9.3

$RF_{ID}$ = strength reduction factor to account for potential degradation due to installation damage (DIM); 5.9.3

$RQD$ = Rock Quality Designation (DIM); 5.3.1

$s$ = horizontal spacing of tie rods (FT); 5.8.6.2.1

$s_c$ = spacing of compression piles (FT); 5.8.6.2.3

$s_m$ = shear strength of rock mass (KSF); 5.5.5.6, 5.7.5

$s_t$ = spacing of tension piles (FT); 5.8.6.2.3

$S_u$ = undrained shear strength of soil (KSF); 5.5.5.6

$S_{ub}$ = undrained shear strength of soil below design grade in front of wall (KSF); 5.5.5.7.2b

$SPT$ = Standard Penetration Test (DIM); 5.3.1

$T$ = design force of structural anchor or ground anchor (KIPS); 5.8.6.1

$T_a$ = long term allowable strength of soil reinforcement associated with tributary area, $A_t$ (KIPS); 5.9.3

$T_{ac}$ = long-term allowable reinforcement / facing connection design strength per width , $b$, of soil reinforcement (KIPS); 5.9.3.5.2

$T_{al}$ = long-term tensile strength required to prevent rupture of the soil reinforcement (KIPS/FT); 5.9.3

$T_f$ = wall footing thickness (FT); 5.6.4

$T_h$ = horizontal component of ground anchor design force (KIPS); 5.8.6.3

$T_{hi}$ = horizontal component of design force in anchor at level $i$ (KIPS/FT); 5.5.5.7

$T_{hn}$ = horizontal component of ground anchor design force at, $n^{th}$, level (KIPS); 5.8.6.3

$T_k$ = width of wall footing key (FT); 5.6.4

$T_{max}$ = maximum soil reinforcement load (KIPS); 5.9.3

$T_n$ = design force of ground anchor at, $n^{th}$, level (KIPS); 5.8.6.3

$T_o$ = tie rod force that provides equilibrium of horizontal forces acting on the wall over the height, $H+D_o$ (KIPS); 5.8.6.2

$T_o$ = maximum soil reinforcement tensile load at the wall face (KIPS); 5.9.3

$T_p$ = axial force in tension pile (KIPS); 5.8.6.2.3

$T_{ph}$ = horizontal component of axial force in a battered tension pile(KIPS); 5.8.6.2.3

$T_T$ = applied test load at failure applied to soil reinforcement connection (KIPS/FT); 5.9.3.5.1

$T_{ult}$ = ultimate capacity of a structural anchor (KIPS); 5.8.6.2

$T_{ult}$ = ultimate capacity of an anchor pile (KIPS); 5.8.6.2.2

$T_{ult}$ = ultimate capacity per tie rod of a continuous pile anchor with tie rods at a spacing, $s$, or ultimate capacity of an individual pile anchor (KIPS); 5.8.6.2.3

$T_{ult}$ = ultimate tensile strength of soil reinforcement determined from wide width tensile tests for geotextiles and geogrids or rib tensile test for geogrid (KIPS/FT); 5.9.3

$V$ = total vertical frictional force per unit width of wall cell perimeter over depth, $y$ (KIPS/FT); 5.10.4

$V_a$ = total vertical frictional force per unit width of short side of rectangular cell over depth, $y$ (KIPS/FT); 5.10.4

$V_b$ = total vertical frictional force per unit width of long side of rectangular cell over depth, $y$ (KIPS/FT); 5.10.4

$V_n$ = nominal shear strength of reinforced concrete crib wall member (KIPS); 5.10.4

$V_p$ = vertical shear force associated with development of plastic moments in reinforced concrete crib wall member (KIPS); 5.10.4

$W$ = resultant weight of failure wedge per unit width of wall (KIPS/FT) ; 5.5.5.5

$W$ = resultant weight of wall including any footing key, the backfill above the footing, and any surcharge loads acting above the footing width per unit width of wall (KIPS/FT); 5.6.4

$W$ = weight of pile cap and pile cap cover for pile anchor (KIPS/FT); 5.8.6.2.3

$W_c$ = total weight of wall fill in cell over depth, $y$ (KIPS); 5.10.4

$W_u$ = segmental facing block unit width from front to back (IN); 5,9.3.6.3

$x$ = horizontal distance from point of load application to the back of the wall (FT); 5.5.5.10

$x_w$ = horizontal distance from toe of footing to location at which, $W$, acts (FT); 5.6.4

$y$ = height above base of wall to location of point of application of, $P_a$ (FT); 5.5.5.8

$y$ = horizontal distance from the point on the back of the wall at which, $D_{ph}$, is being determined to a plane which is perpendicular to the wall and which passes through the point of load application measured along the back of wall (FT); 5.5.5.10

$y$ = indicator of batter of wall (DIM); 5.10.1

$y$ = depth below top of wall cell fill at which pressures are being determined (FT); 5.10.4

$\bar{y}$ = vertical distance from bottom of footing to level of application of, $P_a$ (FT); 5.6.4

$y_a$ = vertical distance from the bottom of embedment, $D_o$, to the level at which, $P_a$, acts on an anchor pile (FT); 5.8.6.2.2

$y_o$ = vertical distance from bottom of wall footing to the level of application of, $P_o$ (FT); 5.6.4

$y_p$ = vertical distance from the bottom of embedment, $D_o$, to the level at which, $P_p$, acts on an anchor pile (FT) ; 5.8.6.2.2

$z$ = depth below the surface of earth at pressure surface (FT); 5.5.5.1

$z$ = vertical distance from the wall backfill surface to the level at which , $D_{ph}$ , is being determined (FT); 5.5.5.10

$z$ = vertical distance from bottom of footing elevation or level of applied vertical stress to level at which, $D\ s_v$ , is being determined (FT); 5.5.5.10

$z$ = vertical distance from finished grade to the mid-point of , $L_e$ , at the level of soil reinforcement under consideration (FT); 5.9.3

$z$ = vertical distance from bottom of footing elevation or level of applied horizontal force to level at which, $D s_H$, is being determined (FT); 5.5.5.10

$z_2$ = depth at which inclined plane for determination of effective width, $D_1$, intersects the back of wall or pressure surface (FT); 5.5.5.10

$z_3$ = depth of back of wall or pressure surface overwhich horizontal stress, $Ds_H$, from the applied horizontal force is distributed (FT); 5.5.5.10

$\bar{Z}$ = vertical distance from the wall backfill surface to the level at which the horizontal earth pressure resultant is applied (FT); 5.5.5.10

$a$ = angle between bottom of wall footing and a plane passing through the lower front corner of the footing and the lower front corner of the footing key (DEG); 5.6.4

$a$ = inclination from horizontal of ground anchor (DEG); 5.8.6.3

$a$ = scale effect correction factor (DIM); 5.9.3

$a_i$ = angle between vertical plane and inner failure surface of Rankine failure wedge (DEG); 5.5.5.3

$a_o$ = angle between vertical plane and outer failure surface of Rankine failure wedge (DEG); 5.5.5.3

$b$ = slope angle of backfill surface behind retaining wall (DEG); 5.5.5.2

$b'$ = slope angle of slope in front of retaining wall (DEG); 5.5.5.6

$d$ = friction angle between backfill material and back of wall (DEG); 5.5.5.3

$d$ = angle of friction between wall footing and foundation soil or rock (for footings on soil, $d$ , may be taken as, $2/3ø'_f$) (DEG); 5.6.4

$D$ = movement of top of wall required to reach minimum active or maximum passive earth pressure by tilting or lateral translation (FT); C 5.5.1

$Ds_h$ = horizontal stress at depth, $z$ , due to horizontal force at base of continuous footing (KSF); 5.5.5.10

$Ds_{hmax}$ = maximum value for, $Ds_h$, which occurs at the bottom of footing elevation (KSF); 5.5.5.10

$Ds_v$ = additional surcharge (KSF); 5.5.5.6

$Ds_v$ = vertical soil stress at level of soil reinforcement under consideration due to concentrated vertical surcharge loads (KSF); 5.9.3

$Ds_v$ = vertical stress at depth, $z$ , due to applied vertical stress (KSF); 5.5.5.10

$D_p$ = constant horizontal earth pressure due to uniform surcharge (KSF); 5.5.5.10

$D_{ph}$ = horizontal earth pressure on the pressure surface at back of wall at a distance, $z$ , from the wall backfill surface (KSF); 5.5.5.10

$D P_p$ = force required for equilibrium of soil mass between structural anchor and anchored wall (KIPS); 5.8.6.2

$D P_p$ = reduction in lateral passive earth pressure acting on an anchor pile (KIPS); 5.8.6.2.2

$D T_{ult}$ = ultimate capacity reduction for a concrete anchor (KIPS); 5.8.6.2.1

$D W_c$ = weight of wall fill in cell over depth, y, not supported by vertical frictional force at cell perimeter over depth, $y$ (KIPS); 5.10.4

$e$ = angle used in calculating, $a_i$ , and, $a_o$ , of Rankine failure wedge (DEG); 5.5.5.3

$n$ = Poisson's ratio (DIM); 5.5.5.10

$s_{avg}$ = average vertical soil stress at level of soil reinforcement under consideration due to weight of soil overburden and distributed vertical surcharge loads above at level of soil reinforcement (KSF); 5.9.3

$s_h$ = horizontal soil stress at level of soil reinforcement (KSF);5.9.3

$s_m$ = vertical soil stress at level of soil reinforcement under consideration using the Meyerhof procedure (KSF);5.9.3

$s_p$ = passive lateral earth pressure at depth $H$ (KSF); 5.5.5.4

$s_v$ = applied vertical stress (KSF); 5.5.5.10

$s_v$ = vertical soil stress at level of soil reinforcement (KSF); 5.9.3

$s_v$ = vertical soil stress at the mid-point of $L_e$, at the level of soil reinforcement under consideration (KSF); 5.9.3

$t_a$ = ultimate ground anchor bond stress (KSF); 5.8.6.3

$ø$ = internal friction angle of reinforced soil mass or foundation soil,whichever is the least (DEG); 5.9.2

$ø$ = resistance factor (DIM); 5.10.4

$ø_c$ = angle of internal friction of wall cell fill (DEG); 5.10.1

$ø_f$ = angle of internal friction of soil (DEG); 5.5.5.4

$ø_f$ = angle of internal friction of retained soil (DEG); 5.9.1

$ø'_f$ = effective angle of internal friction of soil (DEG); 5.5.5.2

$ø'_f$ = effective angle of internal friction of foundation soil (DEG); 5.6.4

$ø_{fn}$ = angle of internal friction of foundation soil (DEG); 5.10.1

$ø_r$ = angle of internal friction of reinforced soil mass (DEG); 5.9.1

$g_c$ = unit weight of wall cell fill (KCF); 5.10.1

$g_f$ = unit weight of retained soil (KCF); 5.9.1

$g_r$ = unit weight of reinforced soil mass (KCF);5.9.1

$g_s$ = unit weight of soil (KCF); 5.5.5.1

$m'$ = tangent of angle of internal friction of wall cell fill, = $tan\, ø_c$ (DIM); 5.10.4

$q$ = angle from the back face of wall to the horizontal as shown in Figure 5.5.5.3-1 (DEG); 5.5.5.3

$r$ = soil to soil reinforcement interface angle (DEG); 5.9.2

$y, y_1, y_2$ = angle from horizontal to failure surface of failure wedge (DEG); 5.5.5.5

$y$ = vertical angle measured from horizontal to failure surface for internal stability analysis for walls with extensible soil reinforcement (DEG); 5.9.3

$y$ = vertical angle measured from horizontal to failure surface within retained soil (DEG); 5.9.1

## Part B
## Service Load Design Method
## Allowable Stress Design

## 5.5 EARTH PRESSURE

### 5.5.1 General

Earth pressure shall be considered a function of the:

- type and unit weight of earth,
- water content,
- soil creep characteristics,
- degree of compaction,
- location of groundwater table,
- seepage,
- earth-structure interaction,
- amount of surcharge, and
- earthquake effects.

### C5.5.1

Walls that can tolerate little or no movement should be designed for at-rest lateral earth pressure. Walls which can move away from the mass should be designed for pressures between active and at-rest conditions, depending on the magnitude of the tolerable movements. Movement required to reach the minimum active pressure or the maximum passive pressure is a function of the wall height and the soil type. Some typical values of these mobilizing movements, relative to wall height, are given in Table C5.5.1-1, where:

$D$ = movement of top of wall required to reach minimum active or maximum passive pressure, by tilting or lateral translation (FT)

$H$ = height of wall (FT)

For walls retaining cohesive materials, the effects of soil creep should be taken into consideration in estimating the design earth pressures. Evaluation of soil creep is complex and requires duplication in the laboratory of the stress conditions in the field as discussed by Mitchell (1976). Further complicating the evaluation of the stress induced by cohesive soils are their sensitivity to shrink-swell, wet-dry and degree of saturation. Tension cracks can form, which considerably alter the assumptions for the estimation of stress. If possible, cohesive or other fine

–grained soils should be avoided as backfill and in no case should highly plastic clays be used.

| Type of Backfill | Values of Δ /H | |
|---|---|---|
| | Active | Passive |
| Dense Sand | 0.001 | 0.01 |
| Medium Dense Sand | 0.002 | 0.02 |
| Loose Sand | 0.004 | 0.04 |
| Compacted Silt | 0.002 | 0.02 |
| Compacted Lean Clay | 0.010 | 0.05 |
| Compacted Fat Clay | 0.010 | 0.05 |

**Table C5.5.1-1**

Approximate Values of Relative Movements Required to Reach Active or Passive Earth Pressure Conditions, Clough (1991)

Under stress conditions close to the minimum active or maximum passive earth pressures, cohesive soils indicated in table C5.5.1-1 creep continually, and the movements shown produce active or passive pressures only temporarily. If there is no further movement, acitve pressures will increase with time, approaching the at-rest pressure, and passive pressures will decrease with time, approaching values on the order of 40% of the maximum short-term value. The at-rest pressure should be based on the residual strength of the soil.

### 5.5.2 Compaction

For non-yielding walls where activity by mechanical compaction equipment is anticipated within a distance of one-half the height of the wall, the effect of additional earth pressure that may be induced by compaction shall be taken into account.

### C5.5.2

Compaction-induced earth pressures may be estimated using procedures described by Clough and Duncan (1991).

### 5.5.3 Presence of Water

If the retained earth is not allowed to drain, the effect of hydrostatic water pressure shall be added to that of earth pressure.

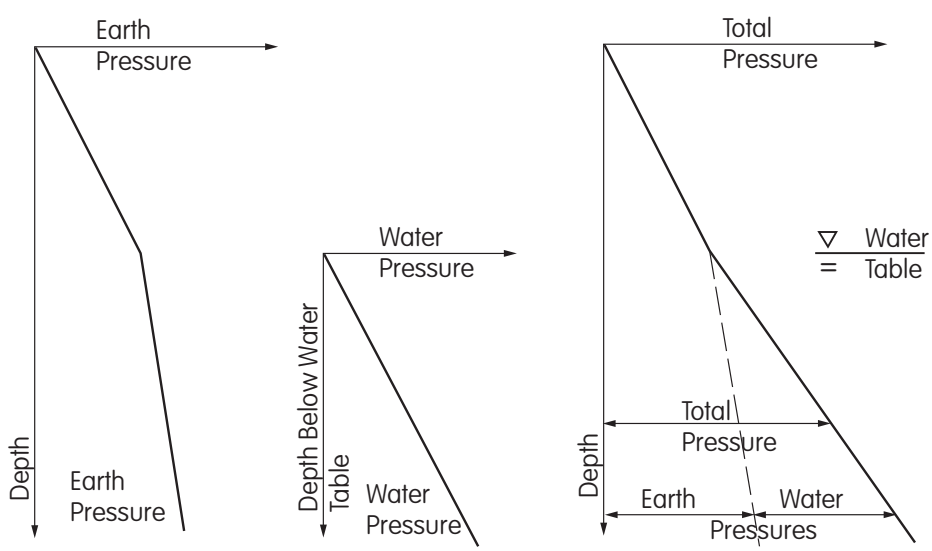


**Figure C5.5.3-1 Effect of Groundwater Table**

In cases where water is expected to pond behind a wall, the wall shall be designed to withstand the hydrostatic water pressure plus the earth pressure.

Submerged unit weights of the soil shall be used to determine the lateral earth pressure below the groundwater table.

If the groundwater levels differ on opposite sides of the wall, the effects of seepage on wall stability and the potential for piping shall be considered. Pore water pressures shall be added to the effective horizontal stresses in determining total lateral earth pressures on the wall.

## C5.5.3

The development of hydrostatic water pressure on walls should be eliminated through use of crushed rock, pipe drains, gravel drains, perforated drains or geosynthetic drains.

Pore water pressures behind the wall may be approximated by flow net procedures or various analytical methods such as the line-of-creep method as presented in the US Army Corps of Engineers, EM 1110-2-2502.

## 5.5.4 Effect of Earthquake

The effects of earthquake shall be considered in the design of retaining walls which support bridge abutments, buildings, soundwalls, critical utilities, or other installations for which there is a low tolerance for failure. The effects of wall inertia and probable amplification of active earth pressure and/or mobilization of passive earth masses by earthquake shall be considered.

## C5.5.4

The Mononobe-Okabe method for determining equivalent static seismic loads may be used for gravity and semi-gravity retaining walls.

The Mononobe-Okabe analysis is based, in part, on the assumption that the backfill soils are unsaturated and thus, not susceptible to liquefaction.

Where soils are subject to both saturation and seismic or other cyclic/instantaneous loads, special consideration should be given to address the possibility of excess pore pressures or soil liquefaction.

## 5.5.5 Earth Pressure

### 5.5.5.1 Basic Lateral Earth Pressure

Basic lateral earth pressure shall be assumed to be linearly proportional to the depth of earth and taken as:

$$P = kg_s z \qquad (5.5.5.1\text{-}1)$$

where:

$p$ = basic lateral earth pressure (KSF)

$k$ = coefficient of lateral earth pressure taken as, $k_o$, for walls that do not deflect or move, or, $k_a$, for walls that deflect or move sufficiently to reach minimum active conditions.

$g_s$ = unit weight of soil (KCF)

$z$ = depth below the surface of earth at pressure surface (FT)

The resultant lateral earth load due to the weight of the backfill shall be assumed to act at a height of $\frac{h}{3}$ above the base of the wall, where $h$ is the height of the pressure surface, measured from the surface of the ground to the base of the wall.

## C5.5.5.1

The location of the resultant lateral earth load on the pressure surface at $\frac{h}{3}$ above the base of the pressure surface is applicable when the backfill surface is planar and the backfill is completely above or completely below the ground water table.

For those situations where the backfill surface is non-planar and/or the ground water table is located within the backfill, a trial wedge method of analysis may be used for the determination of the resultant lateral earth load in which case the location of the resultant lateral earth load may be determined by the intersection of a line that is parallel to the failure surface of the wedge projected from

the centroid of the weight of the failure wedge to the plane of the wall pressure surface. If the projected line is above the top of the pressure surface, the resultant lateral earth load may be assumed to act at the top of the pressure surface.

### 5.5.5.2 At-Rest Lateral Earth Pressure Coefficient, $k_o$

For normally consolidated soils and vertical wall, the coefficient of at-rest lateral earth pressure may be taken as:

$$k_o = (1 - \sin f'_f)(1 + \sin b) \qquad (5.5.5.2\text{-}1)$$

where:

$ø'_f$ = effective friction angle of soil (DEG)

$k_o$ = coefficient of at-rest lateral earth pressure

$b$ = slope angle of backfill surface behind retaining wall (DEG)

For overconsolidated soils, level backfill, and a vertical wall, the coefficient of at-rest lateral earth pressure may be assumed to vary as a function of the overconsolidation ratio or stress history, and may be taken as:

$$k_o = (1 - \sin f'_f)(OCR)^{\sin f'_f} \qquad (5.5.5.2\text{-}2)$$

where:

$OCR$ = overconsolidation ratio

Silt and lean clay shall not be used for backfill unless suitable design procedures are followed and construction control measures are incorporated in the construction documents to account for their presence. Consideration must be given for the development of pore water pressure within the soil mass. Appropriate drainage provisions shall be provided to prevent hydrostatic and seepage forces from developing behind the wall. In no case shall highly plastic clay be used for backfill.

### C5.5.5.2

The evaluation of the stress induced by cohesive soils is highly uncertain due to their sensitivity to shrinkage-swell, wet-dry and degree of saturation. Tension cracks can form, which considerably alter the assumptions for the estimation of stress. Extreme caution is advised in the determination of lateral earth pressures by assuming the most unfavorable conditions.

### 5.5.5.3 Active Lateral Earth Pressure Coefficient, $k_a$

Values for the coefficient of active lateral earth pressure may be taken as:

Coulomb Theory –

$$k_a = \frac{\sin^2(\Theta + f'_f)}{\Gamma\left[\sin^2\Theta \sin(\Theta - d)\right]} \qquad (5.5.5.3\text{-}1)$$

$$\Gamma = \left[1 + \left(\frac{\sin(f'_f + d)\sin(f'_f - b)}{\sin(q - d)\sin(q + b)}\right)^{0.5}\right]^2 \qquad (5.5.5.3\text{-}2)$$

where:

$h$ = height of pressure surface at back of wall (FT)

$P_a$ = active lateral earth pressure resultant per unit width of wall (KIP/FT)

$d$ = friction angle between backfill material and back of wall (DEG)

$b$ = angle from backfill surface to the horizontal (DEG)

$\Theta$ = angle from the back face of wall to the horizontal as shown in Figure 5.5.5.3-1 (DEG)

$ø'_f$ = effective friction angle of soil (DEG)

$k_a$ = coefficient of active lateral earth pressure (DIM)

Rankine Theory –

$$k_a = \frac{\cos\beta \cos^2 \phi'_f}{\left(\cos\beta + (\cos^2\beta - \cos^2\phi'_f)^{0.5}\right)^2}$$

(5.5.5.3-3)

Where $d$ and $\phi'_f$ are as defined for Coulomb's theory. For conditions that deviate from those described in Figures 5.5.5.3-2a, 5.5.5.3-2b and 5.5.5.3-2c for Coulomb's theory and Figure 5.5.5.3-3 for Rankine's theory, the active lateral earth pressure may be calculated by using a trial procedure based on wedge theory.

**C5.5.5.3**

The Coulomb theory is applicable for the design of retaining walls for which the back face of the wall interferes with the full development of the outer failure surface in the backfill soil as assumed in the Rankine theory. In general, The Coulomb theory applies for gravity, semi-gravity, prefabricated modular walls and non-gravity cantilevered walls which have relatively steep back faces, and semi-gravity cantilevered walls with short footing heels. Both the Coulomb theory and the Rankine theory are applicable for the semi-gravity cantilevered walls with long footing heels where the outer failure surface in the backfill soil as assumed in the Rankine theory can fully develop. The Rankine theory is applicable for the design of mechanically stabilized earth walls.

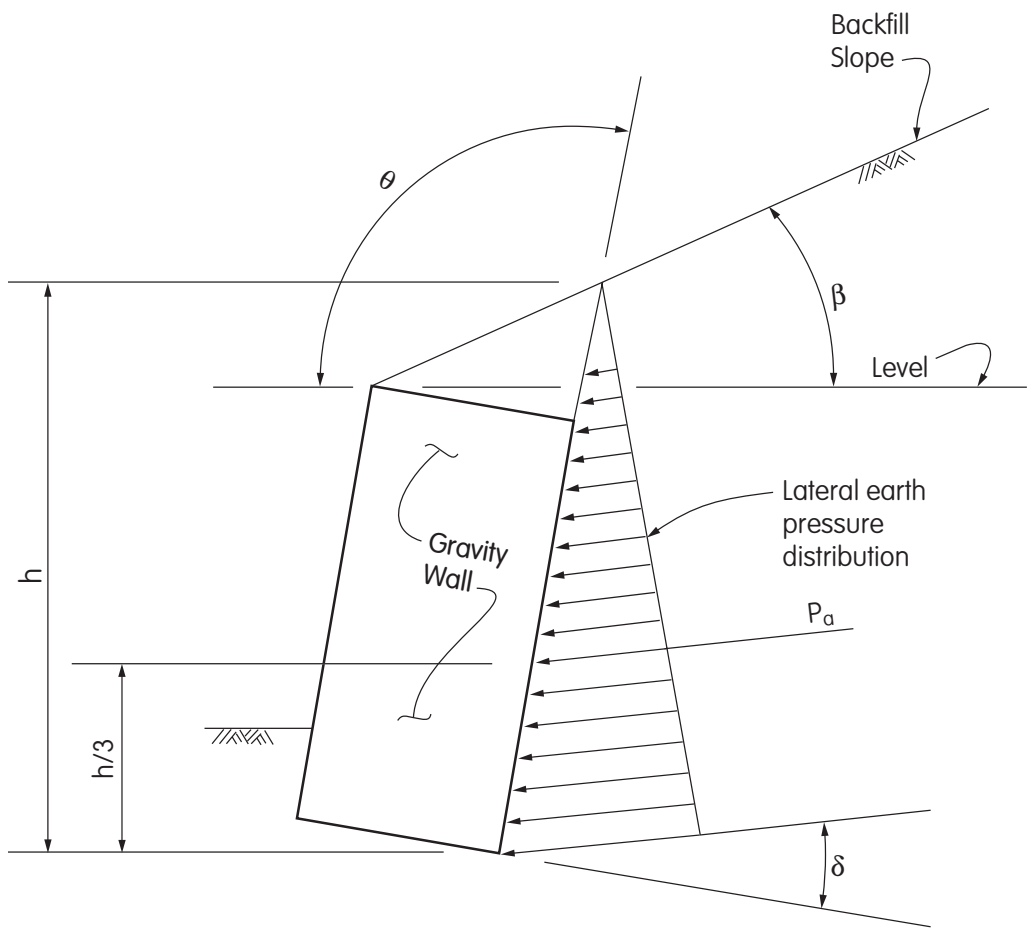


**Figure 5.5.5.3-1 Notation for Coulomb Active Lateral Earth Pressure**

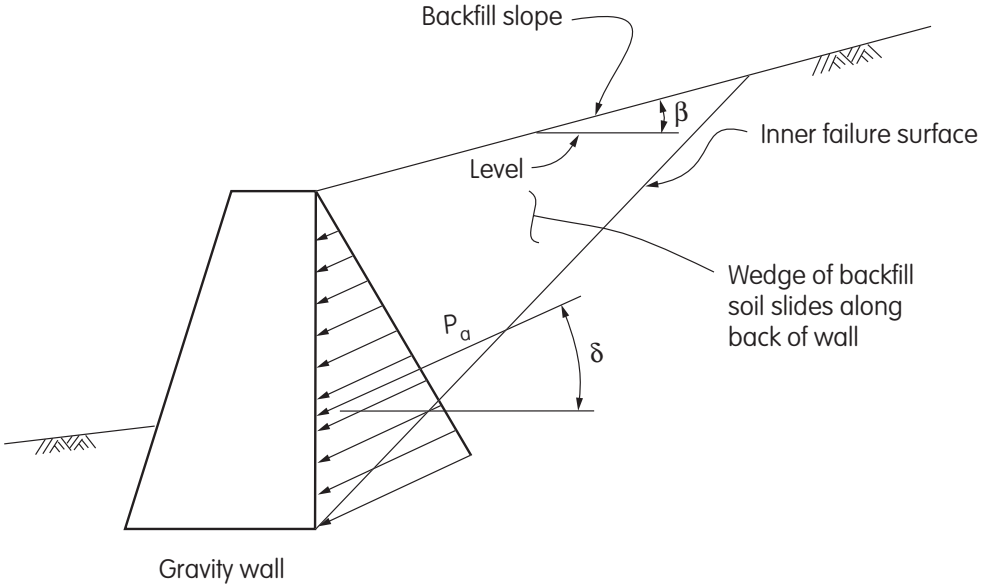


**Figure 5.5.5.3-2a Application of Coulomb Lateral Earth Pressure Theories**

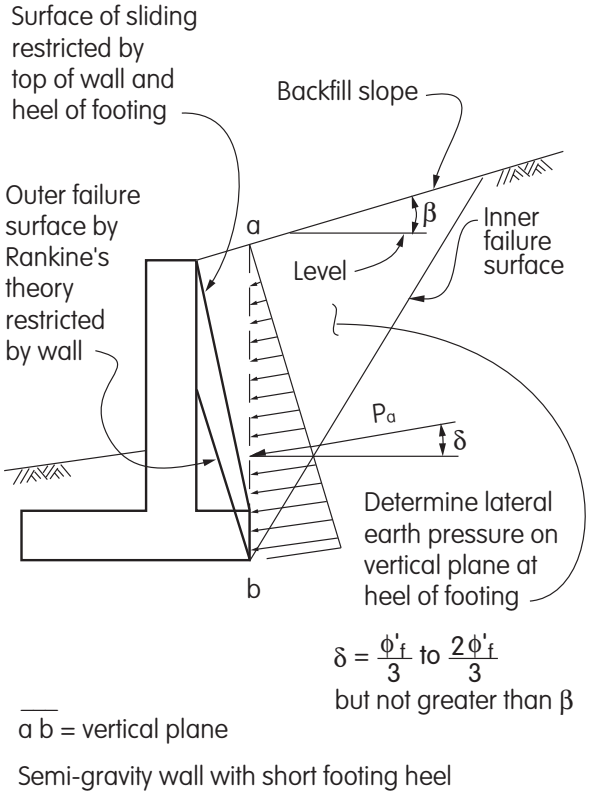


**Figure 5.5.5.3-2b Application of Coulomb Lateral Earth Pressure Theories**

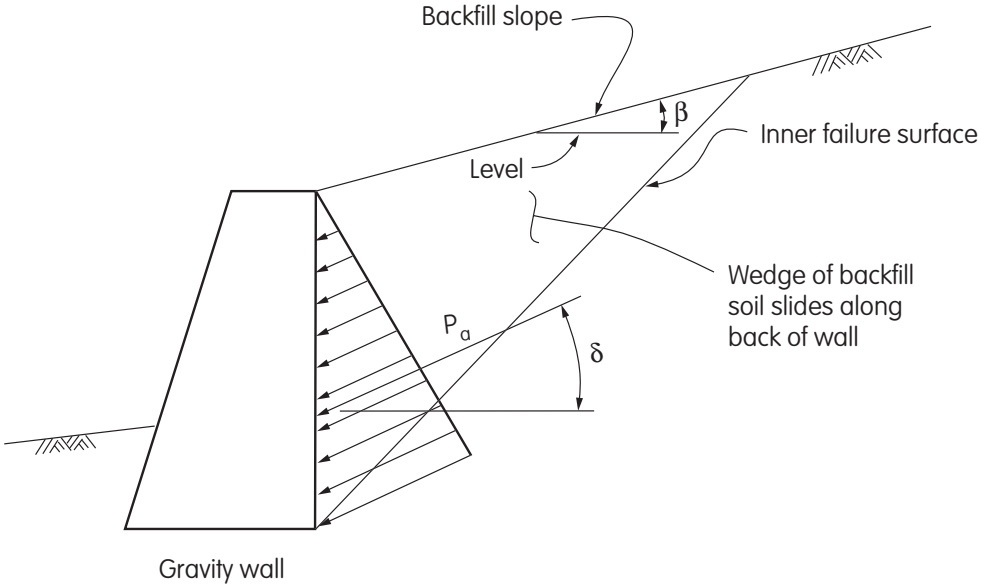


**Figure 5.5.5.3-2a Application of Coulomb Lateral Earth Pressure Theories**

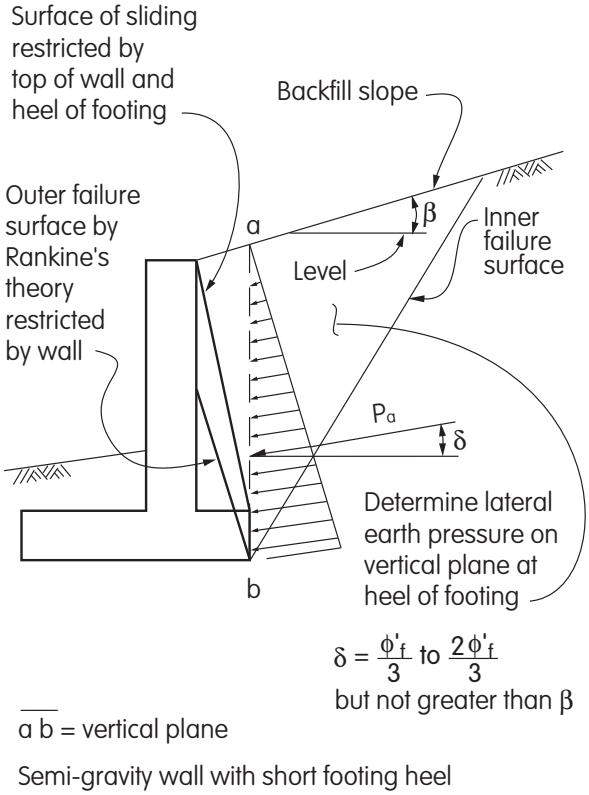


**Figure 5.5.5.3-2b Application of Coulomb Lateral Earth Pressure Theories**

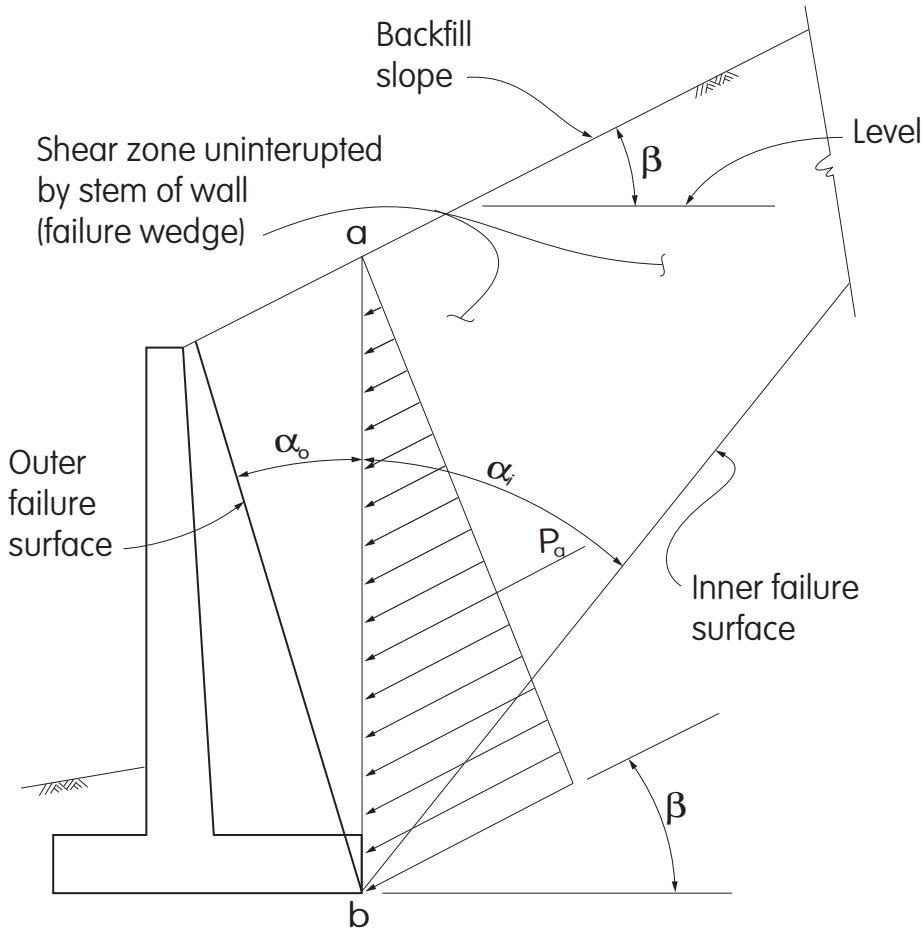


semi-gravity wall with long footing heel

where:

$P_a$ = lateral earth pressure rsultant per unit width of wall determined by Rankine theory (KIP/FT)

$\overline{ab}$ = vertical plane

$\alpha_i$ = ½(90-$\phi'_f$)+½($\varepsilon$-$\beta$) (DEG)

$\alpha_o$ = ½(90-$\phi'_f$)-½($\varepsilon$-$\beta$) (DEG)

$$\sin \varepsilon = \frac{\sin \beta}{\sin \phi'_f}$$

**Figure 5.5.5.3-3 Application of Rankine Lateral Earth Pressure Theories with Notation**

### 5.5.5.4 Passive Lateral Earth Pressure Coefficient, $k_p$

For non-cohesive soils, values of the passive lateral earth pressure may be taken from Figure 5.5.5.4-1 for the case of a sloping or vertical wall with a horizontal backfill or from Figure 5.5.5.4-2 for the case of a vertical wall and sloping backfill. For conditions that deviate from those described in Figures 5.5.5.4-1 and 5.5.5.4-2, the passive pressure may be calculated by using a trial procedure based on wedge theory or a logarithmic spiral method. When wedge theory or logarithmic spiral method are used, the limiting value of the wall friction angle should not be taken larger than one-half the effective angle of internal friction, $\phi'_f$.

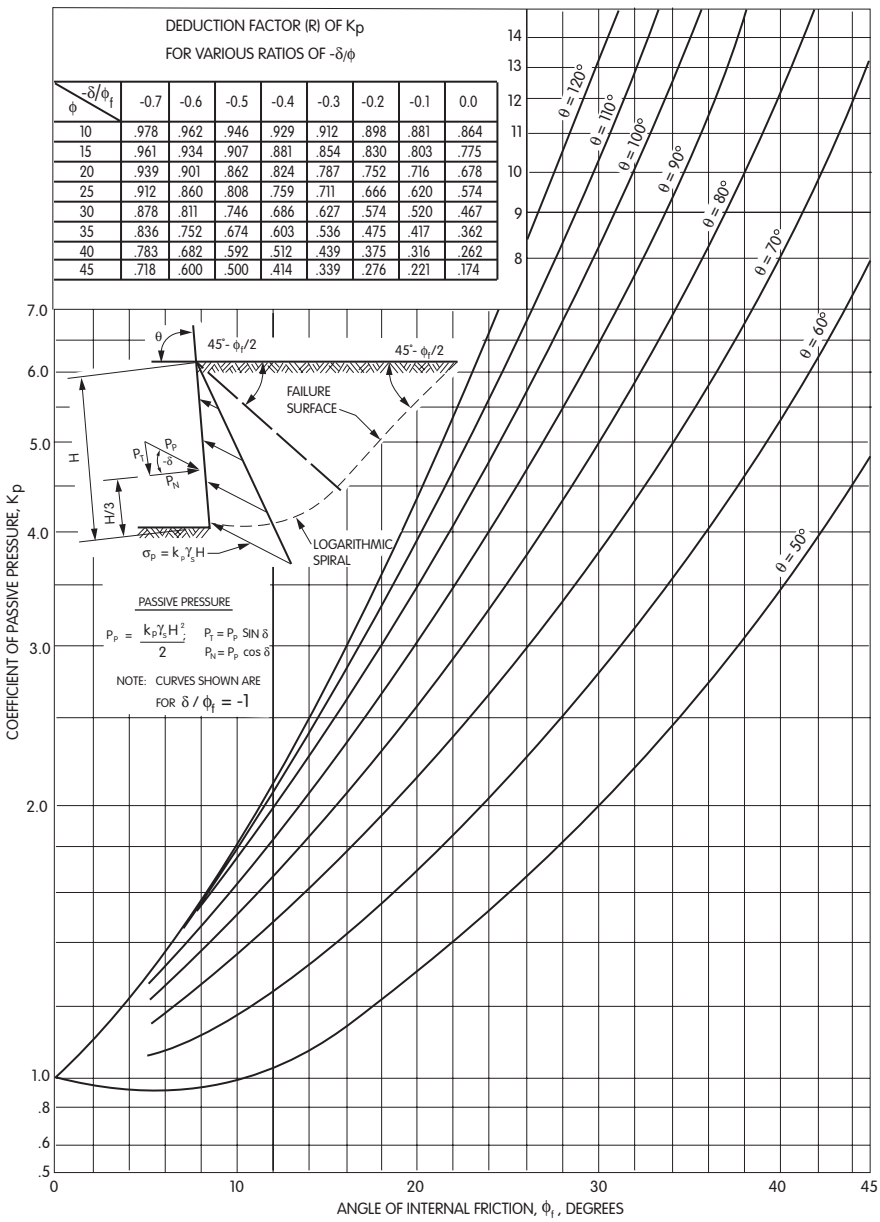


| φ \ -δ/φf | -0.7 | -0.6 | -0.5 | -0.4 | -0.3 | -0.2 | -0.1 | 0.0 |
|---|---|---|---|---|---|---|---|---|
| 10 | .978 | .962 | .946 | .929 | .912 | .898 | .881 | .864 |
| 15 | .961 | .934 | .907 | .881 | .854 | .830 | .803 | .775 |
| 20 | .939 | .901 | .862 | .824 | .787 | .752 | .716 | .678 |
| 25 | .912 | .860 | .808 | .759 | .711 | .666 | .620 | .574 |
| 30 | .878 | .811 | .746 | .686 | .627 | .574 | .520 | .467 |
| 35 | .836 | .752 | .674 | .603 | .536 | .475 | .417 | .362 |
| 40 | .783 | .682 | .592 | .512 | .439 | .375 | .316 | .262 |
| 45 | .718 | .600 | .500 | .414 | .339 | .276 | .221 | .174 |

**Figure 5.5.5.4-1 Coefficient of Passive Lateral Earth Pressure for Vertical and Sloping Walls with Horizontal Backfill ( Caquot and Kerisel Analysis ), Modified after U.S. Department of Navy (1971)**

For cohesive soils, passive lateral earth pressures may be estimated by:

$$P_p = k_p g_s z + 2c(k_p)^{0.5} \qquad (5.5.5.4\text{-}1)$$

where:

$P_p$ = passive lateral earth pressure (KSF)
$g_s$ = unit weight of soil (KCF)
$z$ = depth below surface of soil (FT)
$c$ = unit cohesion (KSF)

$k_p$ = coefficient of passive lateral earth pressure specified in Figures 5.5.5.4-1 and 5.5.5.4-2, as appropriate.

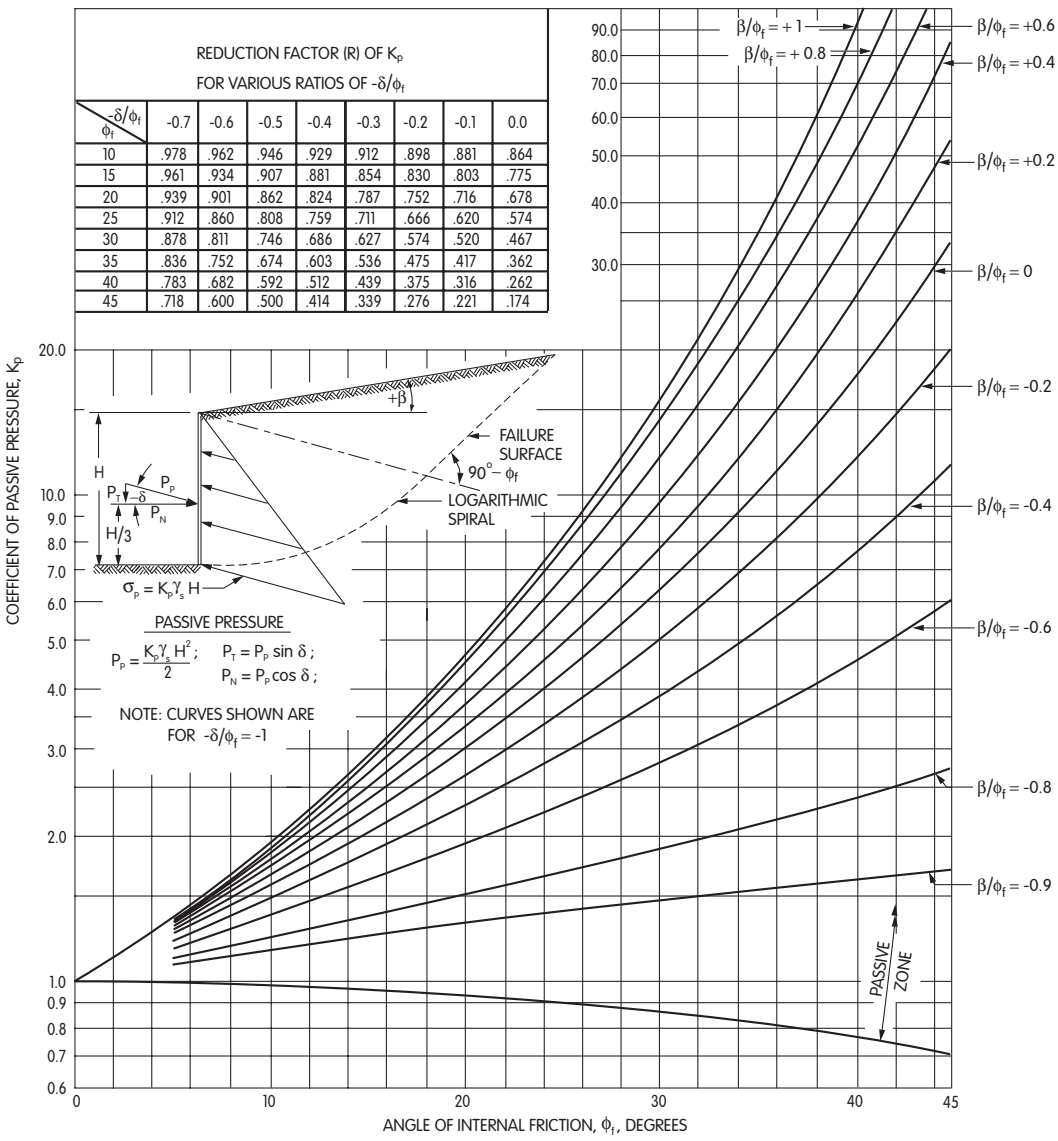


| $-\delta/\phi_f$ \ $\phi_f$ | -0.7 | -0.6 | -0.5 | -0.4 | -0.3 | -0.2 | -0.1 | 0.0 |
|---|---|---|---|---|---|---|---|---|
| 10 | .978 | .962 | .946 | .929 | .912 | .898 | .881 | .864 |
| 15 | .961 | .934 | .907 | .881 | .854 | .830 | .803 | .775 |
| 20 | .939 | .901 | .862 | .824 | .787 | .752 | .716 | .678 |
| 25 | .912 | .860 | .808 | .759 | .711 | .666 | .620 | .574 |
| 30 | .878 | .811 | .746 | .686 | .627 | .574 | .520 | .467 |
| 35 | .836 | .752 | .674 | .603 | .536 | .475 | .417 | .362 |
| 40 | .783 | .682 | .592 | .512 | .439 | .375 | .316 | .262 |
| 45 | .718 | .600 | .500 | .414 | .339 | .276 | .221 | .174 |

**Figure 5.5.5.4-2 Coefficient of Passive Lateral Earth Pressure for Vertical Walls with Sloping Backfill ( Caquot and Kerisel Analysis ), Modified after U.S. Department of Navy (1971)**

### 5.5.5.5 Trial Wedge Method of Analysis for the Determination of the Resultant Lateral Earth Pressure

The trial wedge method of analysis is a procedure by means of which the resultant active and passive lateral earth pressures may be determined using either Coulomb's or Rankine's theories. The only limitation in this method is that the inner failure surface must be plane or so nearly plane that assuming a plane surface does not introduce significant errors. This condition is satisfied when determining active pressures but may not be satisfied when determining passive pressures when large values of wall friction and are used. In addition to the conditions shown in Figures 5.5.5.5. -1 through 5.5.5.5-6 this method can be applied for conditions where the ground water table is located within the failure wedge, when seismic accelerations are applied to the mass of the failure wedge and where soils are cohesive.

Figure 5.5.5.5-1 shows the assumptions used in the determination of the resultant active pressure for a sloping ground condition applying Coulomb's theory. The pressure surface AB yields by rotating in a counterclockwise direction about A and may also yield to the left sufficiently to create an active state of stress in the backfill soil. This movement causes a failure surface to form. It is assumed that this surface is a plane AM. The wedge of soil BAM moves downward a small amount along the failure surface and along the pressure surface. This wedge, whose weight is, $W$, is held in equilibrium by the resultant active pressure, $P_a$, acting on the surface, AB, and the resultant force, R, acting on the failure surface, AM. Since the wedge moves downward along, AB, the force, $P_a$, acts with an assumed obliquity, $d$, below the normal to oppose this movement. Similarly, the force, $R$, acts with an obliquity, $\phi'_f$, below the normal because failure is occurring along this surface. For any assumed direction of the failure surface, AM, as defined by angle, $y$, from the horizontal, the magnitude of, $W$, can be determined and with the directions of, $W$, $R$, and, $P_a$, known or assumed, the magnitude of, $P_a$, can be determined. With the trial wedge method of analysis, the direction of the failure surface, AM, is varied until the determined magnitude of, $P_a$, is a maximum.

Figure 5.5.5.5-2 shows the assumptions used in the determination of the resultant active pressure for a sloping ground condition applying Rankine's theory.

Figure 5.5.5.5-3 shows the application of Coulomb's theory for a broken back slope condition for the determination of the resultant active pressure.

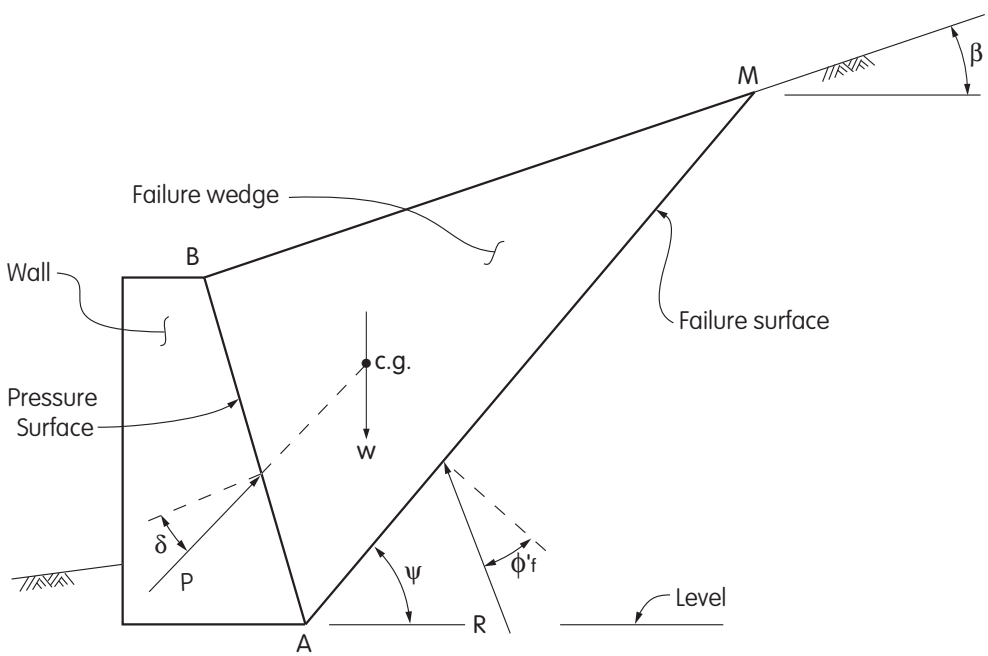


**Figure 5.5.5.5-1 Trial Wedge Method-Active Pressure, Coulomb's Theory**

Figure 5.5.5.5-4 shows the application of Rankine's theory for a broken back slope condition for the determination of the resultant active pressure. The direction of the resultant active pressure is assumed to be parallel to a line passing through points, V, and, M.

In Figures 5.5.5.5-1 through 5.5.5.5-4 the point of application of the resultant active pressure on the pressure surface is determined by passing a line through the center of gravity (c.g.) of the weight of the failure wedge which is parallel to the failure surface, AM. The point at

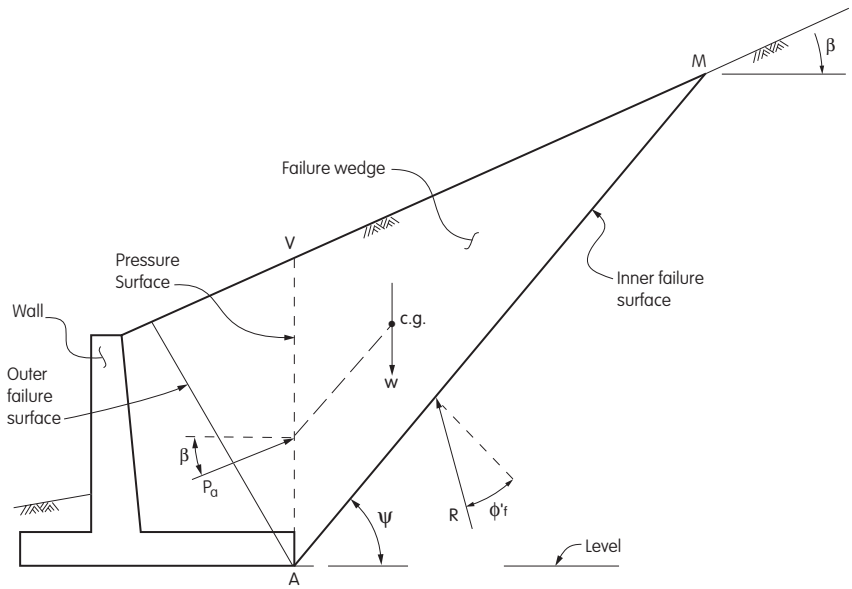


**Figure 5.5.5.5-2 Trial Wedge Method-Active Pressure, Rankine's Theory**

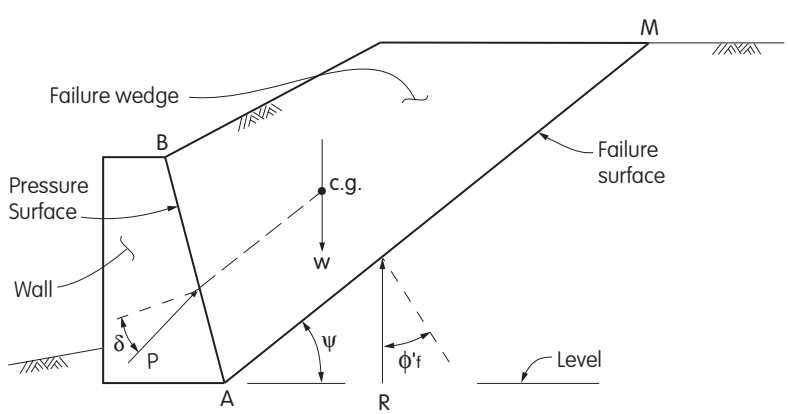


**Figure 5.5.5.5-3 Trial Wedge Method-Broken Back Slope-Active Pressure, Coulomb's Theory**

which this line intersects the pressure surface, AB, or, AV, is the point of application of the resultant active pressure.

Figure 5.5.5.5-5 shows the application of Coulomb's theory for a broken back slope condition and a broken pressure surface. The determination of, $W$, $R$, and, $P_{a1}$, is similar to the determination of, $W$, $R$, and, $P_a$, shown in figure 5.5.5.5-3. In the determination of, $P_{a2}$, failure wedge 2 has the forces, $P_{a2}$, $W_2$, and, $R_2$, acting on it plus the force, $R_1$, from failure wedge 1.

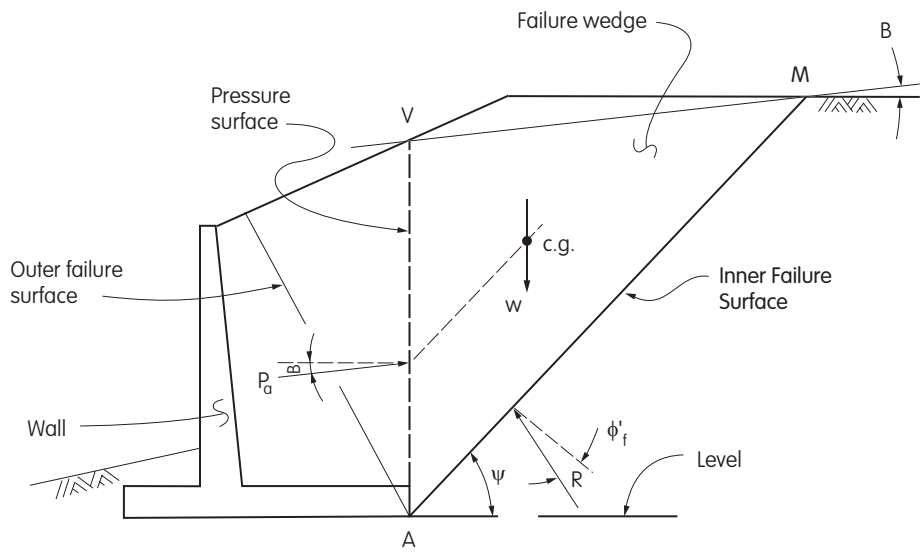


The direction of, $P_a$, is parallel to a line, VM

**Figure 5.5.5.5-4 Trial Wedge Method-Broken Back Slope-Active Pressure, Rankine's Theory**

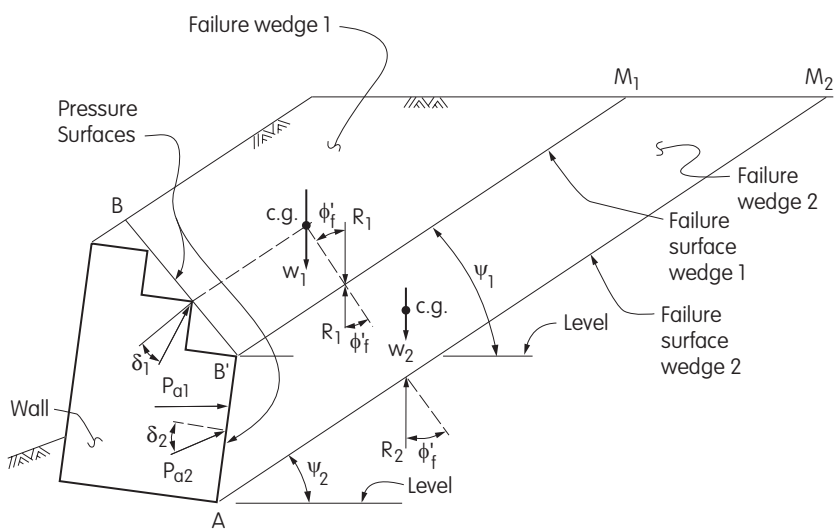


**Figure 5.5.5.5-5 Trial Wedge Method-Broken Back Slope and Broken Pressure Surface-Active Pressure, Coulomb's Theory**

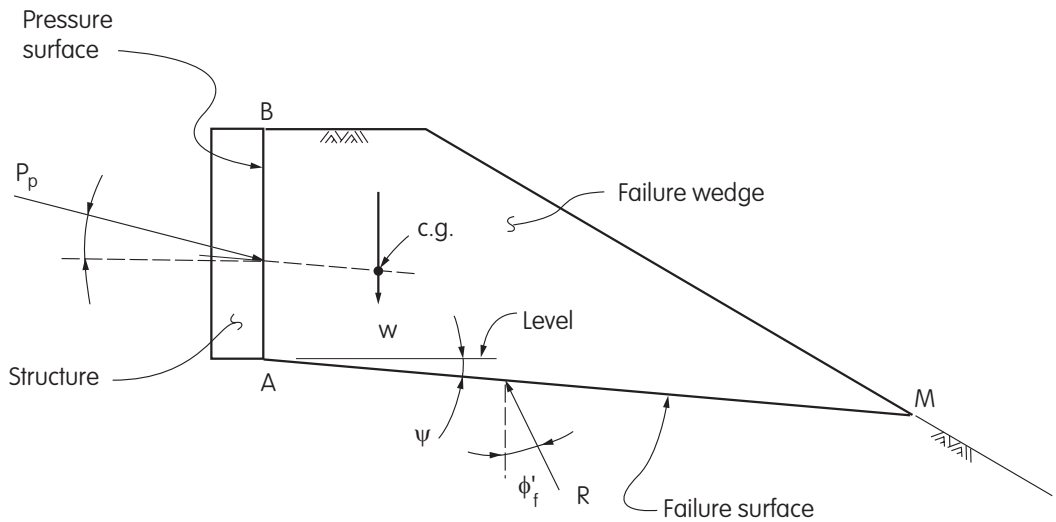


**Figure 5.5.5.5-6 Trial Wedge Method-Passive Pressure, Coulomb's Theory**

Figure 5.5.5.5-6 shows the assumptions used in the determination of the resultant passive pressure for a broken back slope condition applying Coulomb's theory. The pressure surface, AB, moves toward the backfill soil by rotating in a clockwise direction about, A, and may also translate to the right sufficiently to create a passive state of stress in the backfill soil. This movement causes a failure surface to form. It is assumed that this surface is a plane, AM. The wedge of soil, BAM, moves downward along the failure surface and also upward relative to the pressure surface of the structure. This wedge, whose weight is, *W*, is held in equilibrium by the resultant passive pressure, $P_p$ , acting on the surface, AB, and the resultant force, *R*, acting on the failure surface, AM. Since the wedge moves upward along, AB, the force, $P_p$ , acts with an assumed obliquity, *d* , above the normal to oppose this movement. Similarly, the force, *R* , acts with an obliquity, $\phi'_f$, to the normal in a direction that opposes movement of the wedge along the failure surface. For any assumed direction of the failure surface, AM, as defined by angle *y* from the horizontal, the directions of, *W*, *R*, and, $P_p$ , are known or assumed, and the magnitude of, $P_p$, can be determined. With the trial wedge method of analysis, the direction of the failure surface, AM, is varied until the determined magnitude of, $P_p$ , is a minimum. The point of application of the resultant passive pressure on the pressure surface is determined by passing a line through the center of gravity (c.g.) of the weight of the failure wedge which is parallel to the failure surface, AM. The point at which this line intersects the pressure surface, AB, is the point of application of the resultant passive pressure.

### 5.5.5.6 Lateral Earth Pressures For Non-Gravity Cantilevered Walls

For permanent walls, the simplified lateral earth pressure distributions shown in Figures 5.5.5.6-1 and 5.5.5.6-2 may be used. If walls will support or are supported by cohesive soils for temporary applications, the walls may be designed based on total stress methods of analysis and undrained shear strength parameters. For this latter case, the simplified lateral earth pressure distributions shown in Figures 5.5.5.6-3, and 5.5.5.6-4 may be used with the following restrictions:

- The ratio of total overburden pressure to undrained shear strength, $N_S$ (see Article 5.5.5.7.2), must be <3 at the design grade in front of wall.

- The active lateral earth pressure acting over the wall height, *H*, shall not be less than *0.25* times the effective overburden pressure at any depth, or *0.036* KSF/FT of wall height, which ever is greater.

For temporary walls with vertical elements embedded in granular soil or rock and retaining cohesive soil, Figures 5.5.5.6-1 and 5.5.5.6-2 may be used to determine the lateral earth pressure distributions on the embedded portion of the vertical elements and Figure 5.5.5.6-4 may be used to determine the lateral earth pressure distribution due to the retained cohesive soil.

The lateral earth pressure distributions in Figures 5.5.5.6-1 thru 5.5.5.6-4 shown acting on the embedded portion of vertical wall elements shall be applied to the effective width, *b'*, of discrete vertical wall elements. See Article 5.7.6 for effective widths of discrete vertical wall elements to be used.

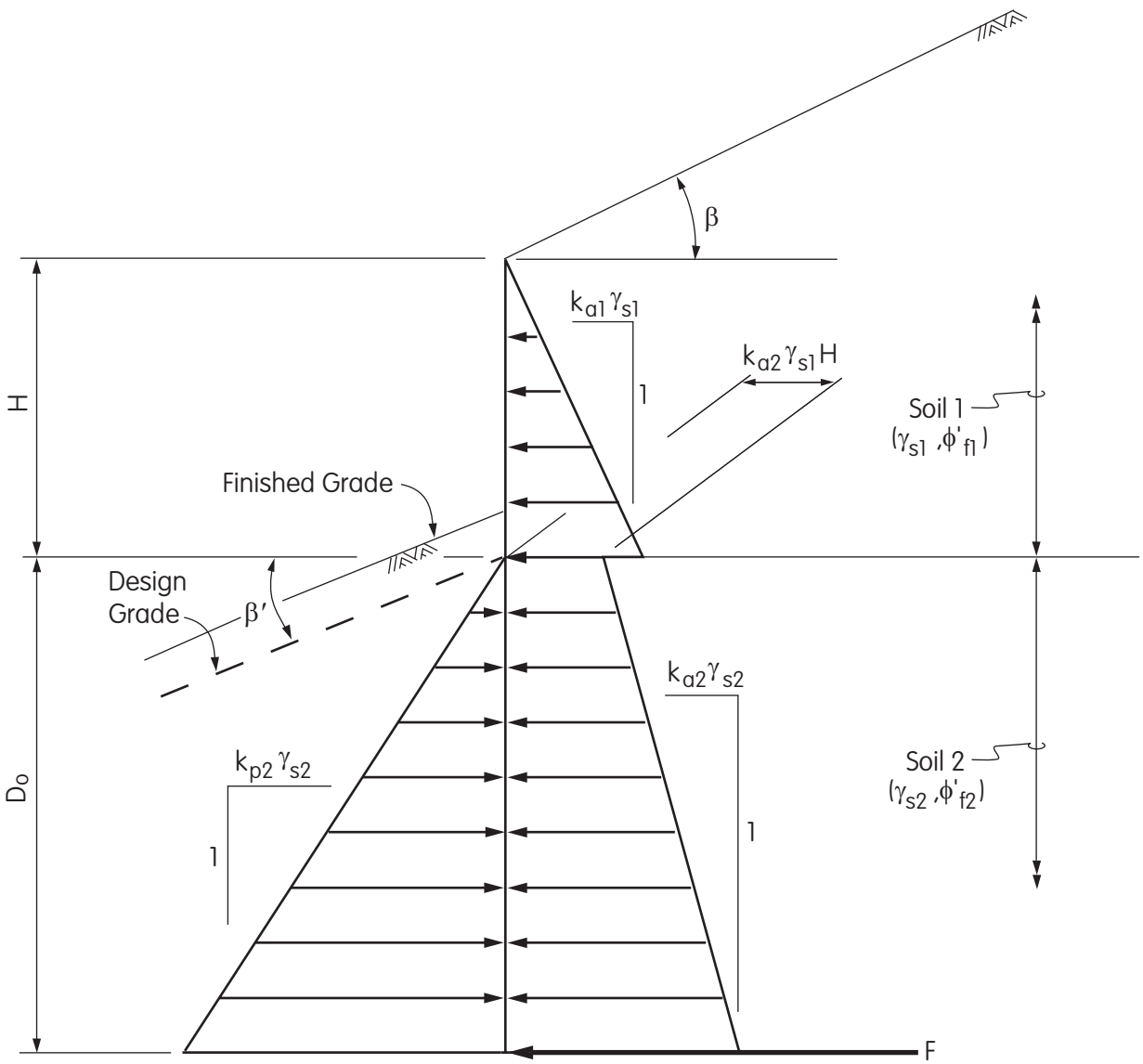


Note: The value of β′ is negative for the slope shown.

**Figure 5.5.5.6-1 Simplified Lateral Earth Pressure Distributions for Permanent Non-gravity Cantilevered Walls with Vertical Wall Elements Embedded in Granular Soil and Retaining Granular Soil**

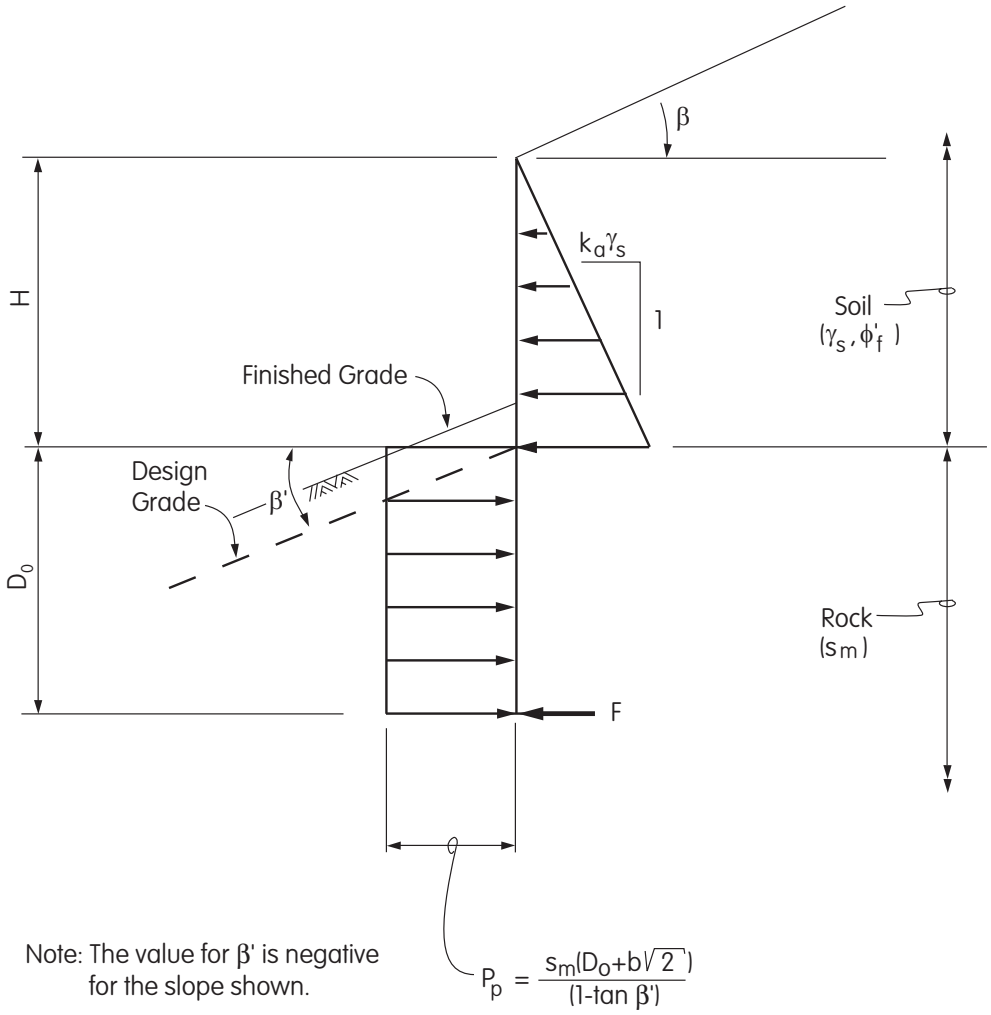


where:

b = Actual width of embedded discrete vertical wall element below design grade in plane of wall (feet)

$P_p$ = Passive resistance of the rock acting on the actual width of the embedded discrete vertical wall element (KIP/FT)

**Figure 5.5.5.6-2 Simplified Lateral Earth Pressure Distributions for Permanent Non-gravity Cantilevered Walls with Discrete Vertical Wall Elements Embedded in Rock and Retaining Granular Soil**

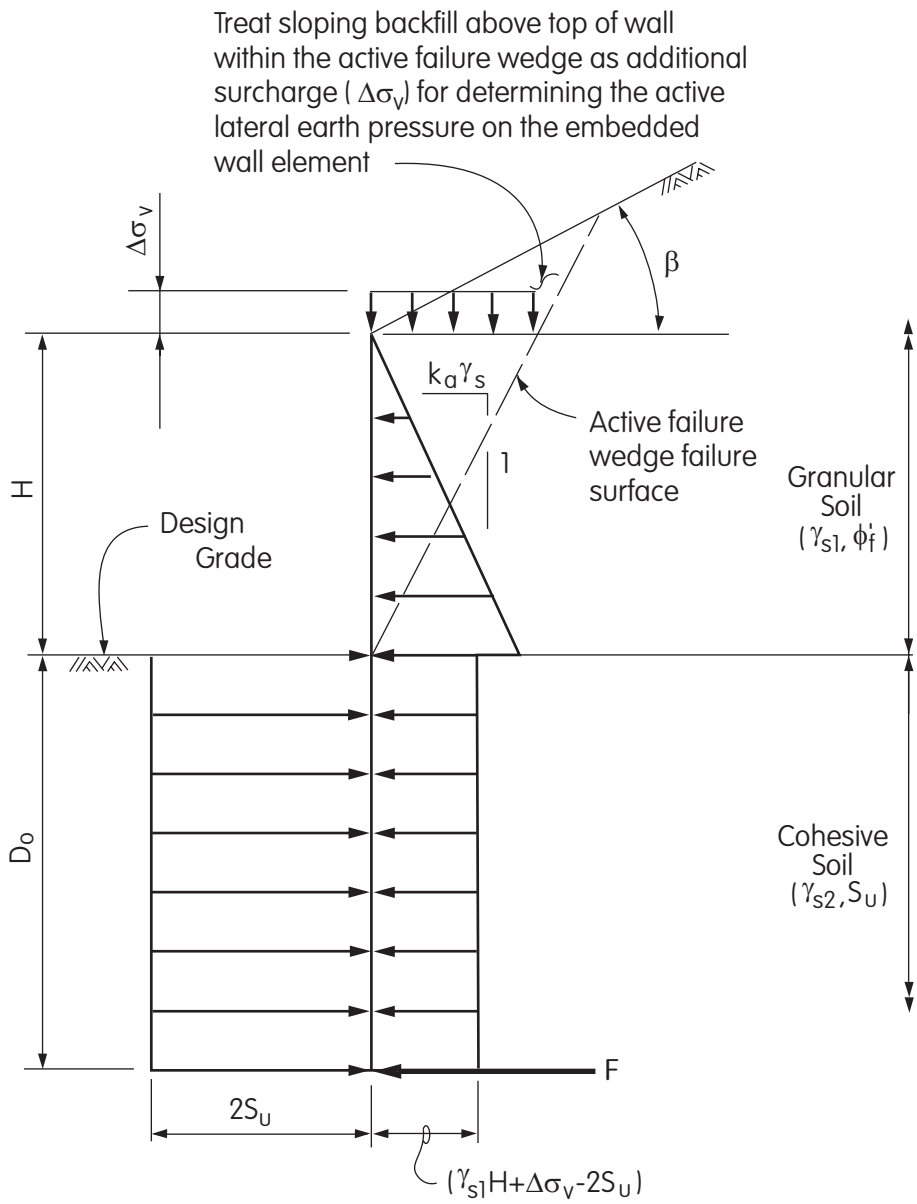


**Figure 5.5.5.6-3 Simplified Lateral Earth Pressure Distributions for Temporary Non-gravity Cantilevered Walls with Vertical Wall Elements Embedded in Cohesive Soil and Retaining Granular Soil**

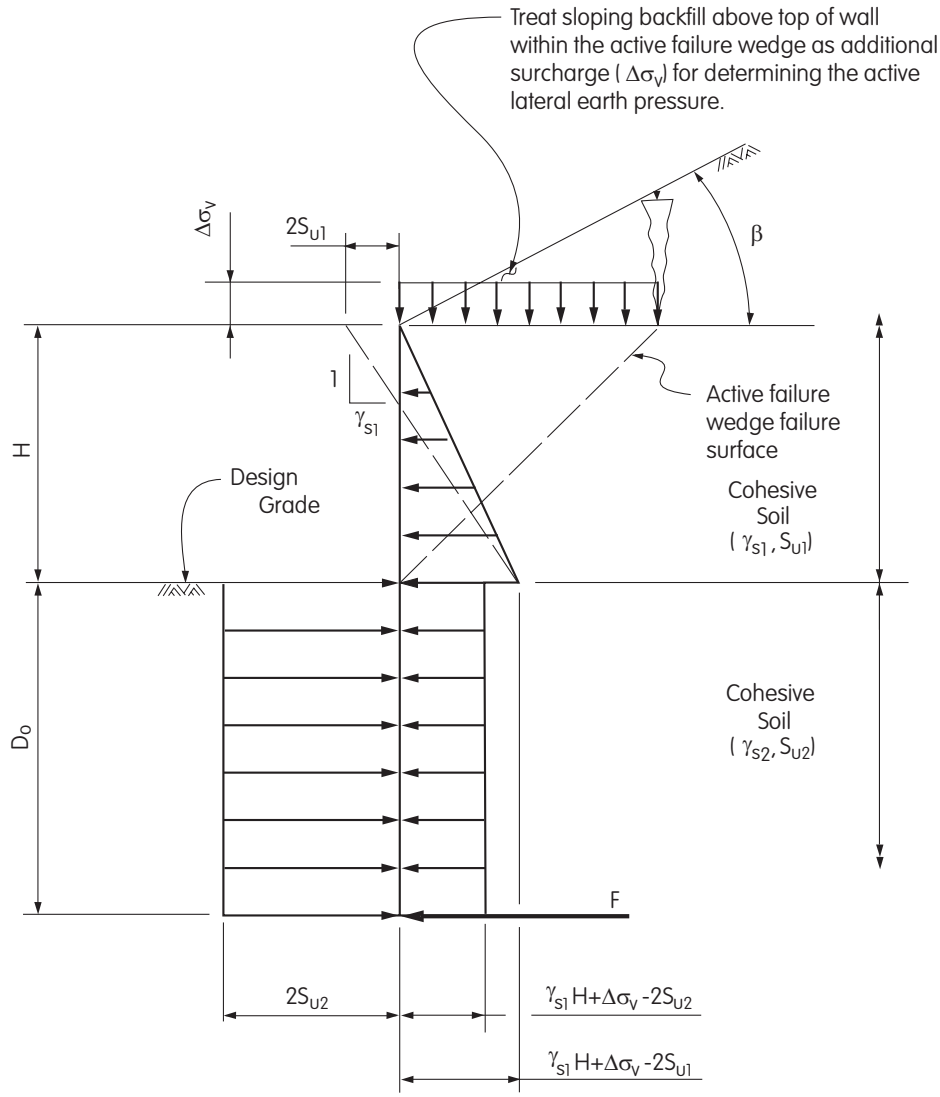


Note: A portion of negative loading at top of wall due to cohesion is ignored and hydrostatic pressure in a tension crack should be considered, but is not shown.

**Figure 5.5.5.6-4 Simplified Lateral Earth Pressure Distributions for Temporary Non-gravity Cantilevered Walls with Vertical Wall Elements Embedded in Cohesive Soil and Retaining Cohesive Soil**

### 5.5.5.7 Lateral Earth Pressures for Anchored Walls

For anchored walls restrained by tie rods and structural anchors, the lateral earth pressure acting on the wall may be determined in accordance with Article 5.5.5.6.

For anchored walls constructed from the top down and restrained by ground anchors (tieback anchors), the lateral earth pressure acting on the wall height, *H*, may be determined in accordance with Articles 5.5.5.7.1 and 5.5.5.7.2.

For anchored walls constructed from the bottom up and restrained by a single level of ground anchors located not more than one third of the wall height, *H*, above the bottom of the wall, the total lateral earth pressure, $P_{Total}$, acting on the wall height, *H*, may be determined in accordance with Article 5.5.5.7.1 with distribution assumed to be linearly proportional to depth and a maximum pressure equal to, $\frac{2P_{Total}}{H}$. For anchored walls constructed from the bottom up and restrained by multiple levels of ground anchors, the lateral earth pressure acting on the wall height, *H*, may be determined in accordance with Article 5.5.5.7.1.

In developing the lateral earth pressure for design of an anchored wall, consideration shall be given to wall displacements that may affect adjacent structures and/or underground utilities.

### C5.5.5.7

In the development of lateral earth pressures, the method and sequence of wall construction, the rigidity of the wall/anchor system, the physical characteristics and stability of the ground mass to be supported/retained, allowable wall deflections, anchor spacing and prestress and the potential for anchor yield should be considered.

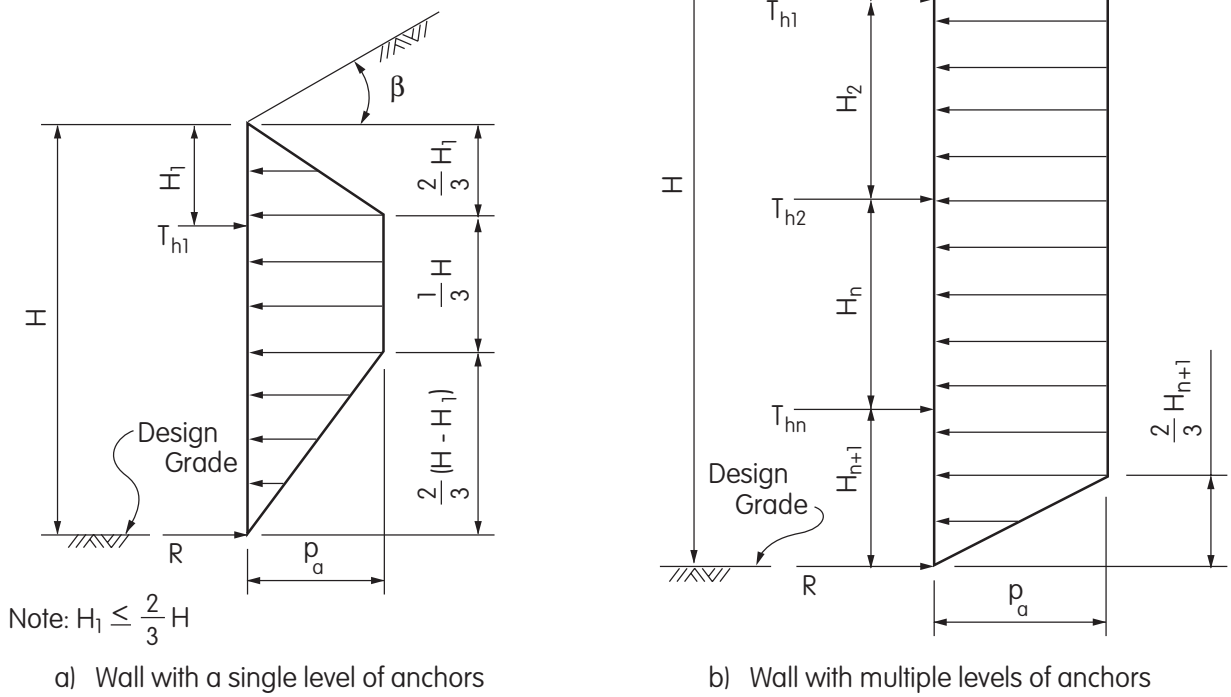


**Figure 5.5.5.7.1-1 Lateral Earth Pressure Distributions for Anchored Walls Constructed from the Top Down in Cohesionless Soils**

### 5.5.5.7.1 Cohesionless Soils

The lateral earth pressure distribution for the design of temporary or permanent anchored walls constructed in cohesionless soils may be determined using Figure 5.5.5.7.1-1, for which the maximum ordinate, $p_a$, of the pressure diagram is determined as follows:

For walls with a single level of anchors :

$$p_a = \frac{P_{Total}}{\frac{2}{3}H} \qquad (5.5.5.7.1\text{-}1)$$

For walls with multiple levels of anchors:

$$p_a = \frac{P_{Total}}{\left(H - \frac{1}{3}H_1 - \frac{1}{3}H_{n+1}\right)} \qquad (5.5.5.7.1\text{-}2)$$

where:

$p_a$ = maximum ordinate of pressure dia gram (KSF)

$P_{Total}$ = total lateral load required to be ap plied to the wall face to provide a factor of safety equal to 1.3 for the retained soil mass when stability is analyzed using an appropriate limiting equilibrium method of analysis. Except that $P_{Total}$, shall not be less than $1.44P_a$. (KIP)

$P_a$ = active lateral earth pressure resultant acting on the wall height, $H$, and determined using Coulomb's theory with a wall friction angle, $d$, equal to zero. (KIP)

$H$ = wall design height (FT)

$H_1$ = distance from ground surface at top of wall to uppermost level of anchors. (FT)

$H_{n+1}$ = distance from design grade at bottom of a wall to lowermost level of anchors (FT)

$T_{hi}$ = horizontal component of design force in anchor at level $i$ (KIP/FT)

$R$ = design reaction force at design grade at bottom of wall to be resisted by embedded portion of wall (KIP/FT)

### 5.5.5.7.2 Cohesive Soils

The lateral earth pressure distribution for cohesive soils is related to the stability number, $N_S$, which is defined as:

$$N_s = \frac{\gamma_s H}{S_u}$$

where:

$g_s$ = total unit weight of soil (KCF)

$H$ = wall design height (FT)

$S_u$ = average undrained shear strength of soil (KSF)

#### 5.5.5.7.2a Stiff to Hard

For temporary anchored walls in stiff to hard cohesive soils ( $N_s \leq 4$), and $b$ = zero, the lateral earth pressure may be determined using Figure 5.5.5.7.1-1, with the maximum ordinate, $p_a$, of the pressure diagram determined as:

$$p_a = 0.2 g_s H \text{ to } 0.4 g_s H \qquad (5.5.5.7.2a-1)$$

where:

$p_a$ = maximum ordinate of pressure diagram (KSF)

$g_s$ = total unit weight of soil (KCF)

$H$ = wall design height (FT)

For permanent anchored walls in stiff to hard cohesive soils, the lateral earth pressure distributions described in Article 5.5.5.7.1 may be used with, $P_{Total}$, based on the drained friction angle of the cohesive soil. For permanent walls, the distribution (permanent or temporary) resulting in the maximum total force shall be used for design.

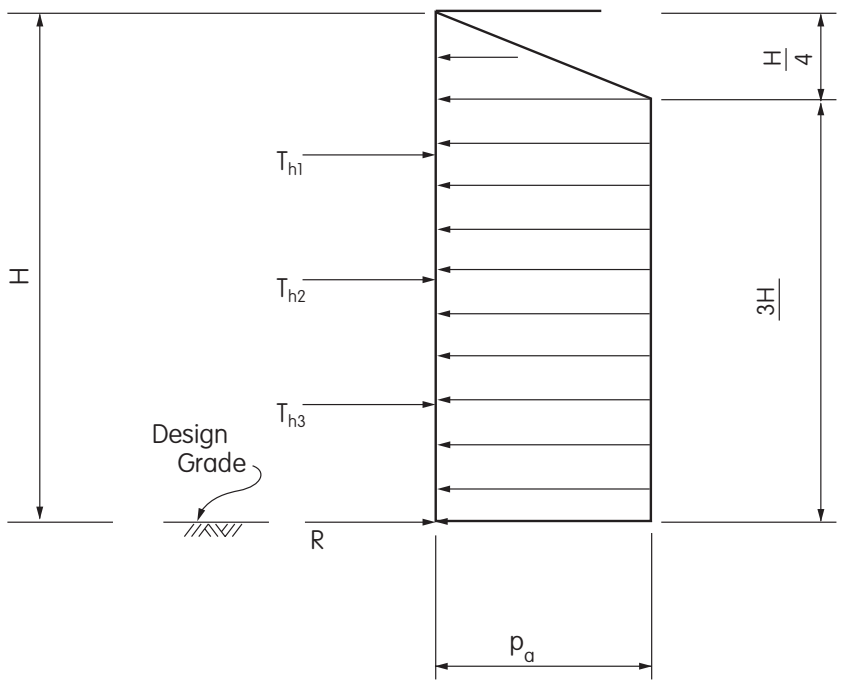


**Figure 5.5.5.7.2b-1 Lateral Earth Pressure Distribution for Anchored Walls Constructed from the Top Down in Soft to Medium Stiff Cohesive Soils**

## C5.5.5.7.2a

In the absence of specific experience in a particular soil deposit, $p_a = 0.3 g_s H$ should be used for the maximum pressure ordinate when the anchors are locked off at 75 percent of the design force or less. Where anchors are to be locked off at 100 percent of the design force or greater, a maximum pressure ordinate of $p_a = 0.4 g_s H$ should be used.

For temporary walls the lateral earth pressure distributions in Figure 5.5.5.7.1-1 should only be used for excavations of controlled short duration, where the soil is not fissured and where there is no available free water.

### *5.5.5.7.2b Soft to Medium Stiff*

The lateral earth pressure on temporary or permanent walls in soft to medium stiff cohesive soils ($N_S \geq 6$) and $b$ =zero, may be determined, using Figure 5.5.5.7.2b-1 for which the maximum ordinate, $p_a$, of the pressure diagram is determined as:

$$p_a = k_a g_s H \qquad (5.5.5.7.2b\text{-}1)$$

where:

$p_a$ = maximum ordinate of pressure diagram (KSF)

$k_a$ = coefficient of active lateral earth pressure from Equation 5.5.5.7.2b-2

$g_s$ = total unit weight of soil (KCF)

$H$ = wall design height (FT)

The coefficient of active lateral earth pressure, $k_a$, may be determined by:

$$k_a = 1 - \frac{4S_u}{\gamma_s H} + 2\sqrt{2}\,\frac{d}{H}\left(\frac{1 - 5.14 S_{ub}}{\gamma_s H}\right) \geq 0.22 \qquad (5.5.5.7.2b\text{-}2)$$

where:

$S_u$ = undrained shear strength of retained soil (KSF)

$S_{ub}$ = undrained shear strength of soil below design grade in front of wall (KSF)

$g_s$ = total unit weight of retained soil (KCF)

$H$ = wall design height (FT)

$d$ = depth of potential base failure surface below the design grade in front of wall (FT)

The value of, $d$ , is taken as the thickness of soft to medium stiff cohesive soil below the design grade in front of the wall up to a maximum value of, $B_e/\sqrt{2}$ , where, $B_e$ , is the width of excavation in front of the wall.

For permanent anchored walls in soft to medium clay, long-term lateral earth pressures determined using drained shear strengths and effective stresses may be greater than pressures determined using undrained strengths and should be considered in design.

### C5.5.5.7.2b

For soils with $4<N_s<6$, use the larger , $p_a$ , from Equations 5.5.5.7.2a-1 and 5.5.5.7.2b-1.

### 5.5.5.8 Lateral Earth Pressures For Mechanically Stabilized Earth Walls

The lateral active earth pressure resultant applied to the back of an MSE wall as shown in Figures 5.5.5.8-1, 5.5.5.8-2 and 5.5.5.8-3 shall be determined using the Rankine theory in accordance with Articles 5.5.5.1, 5.5.5.3 and 5.5.5.5.

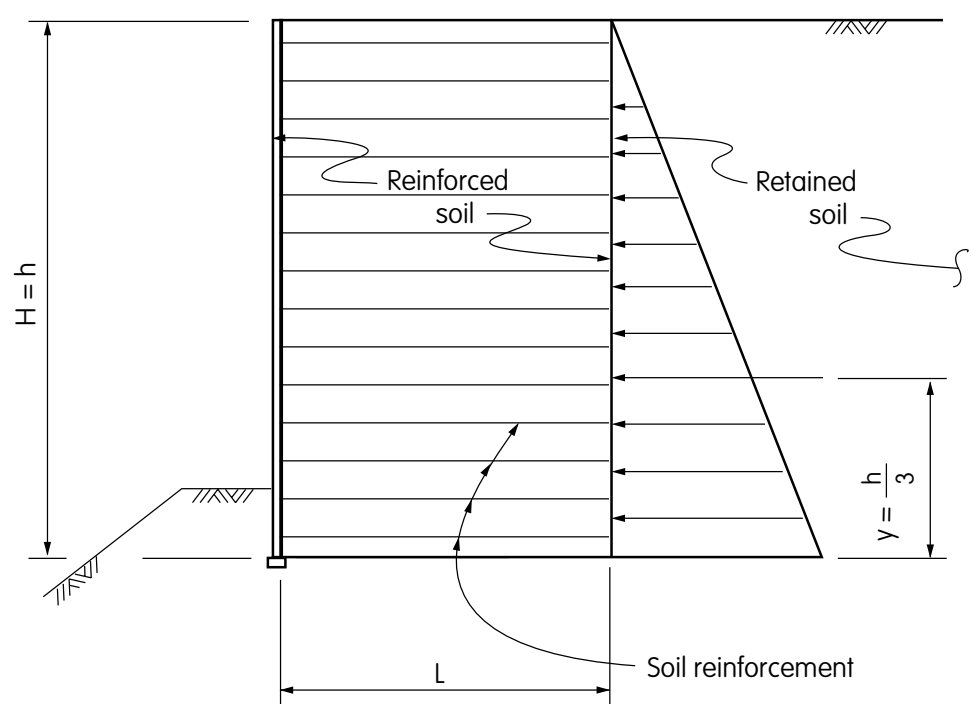


**Figure 5.5.5.8-1 Lateral Earth Pressure Distribution and Resultant for MSE Wall with Level Backfill Surface**

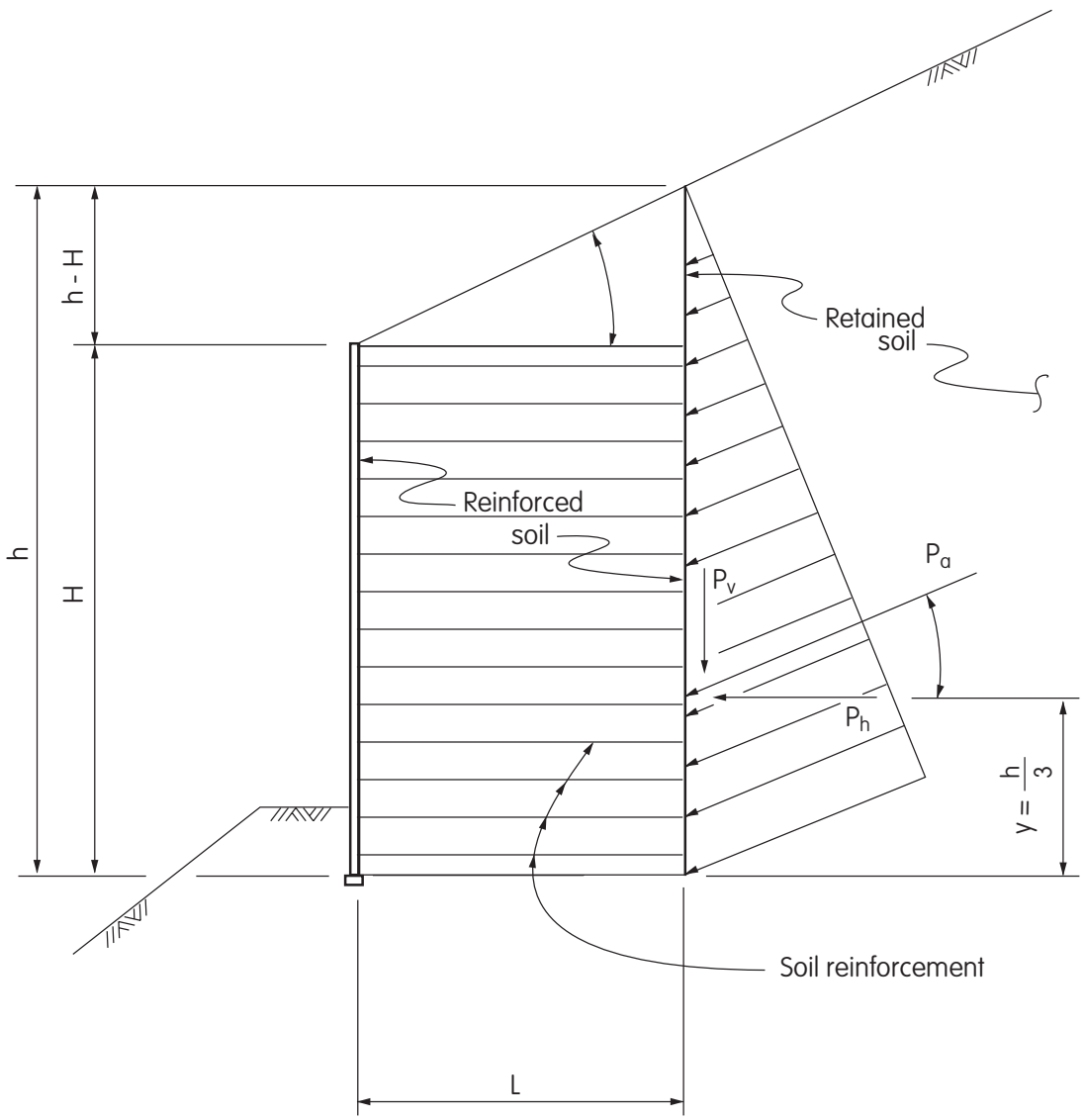


**Figure 5.5.5.8-2 Lateral Earth Pressure Distribution and Resultant for MSE Wall with Sloping Backfill Surface**

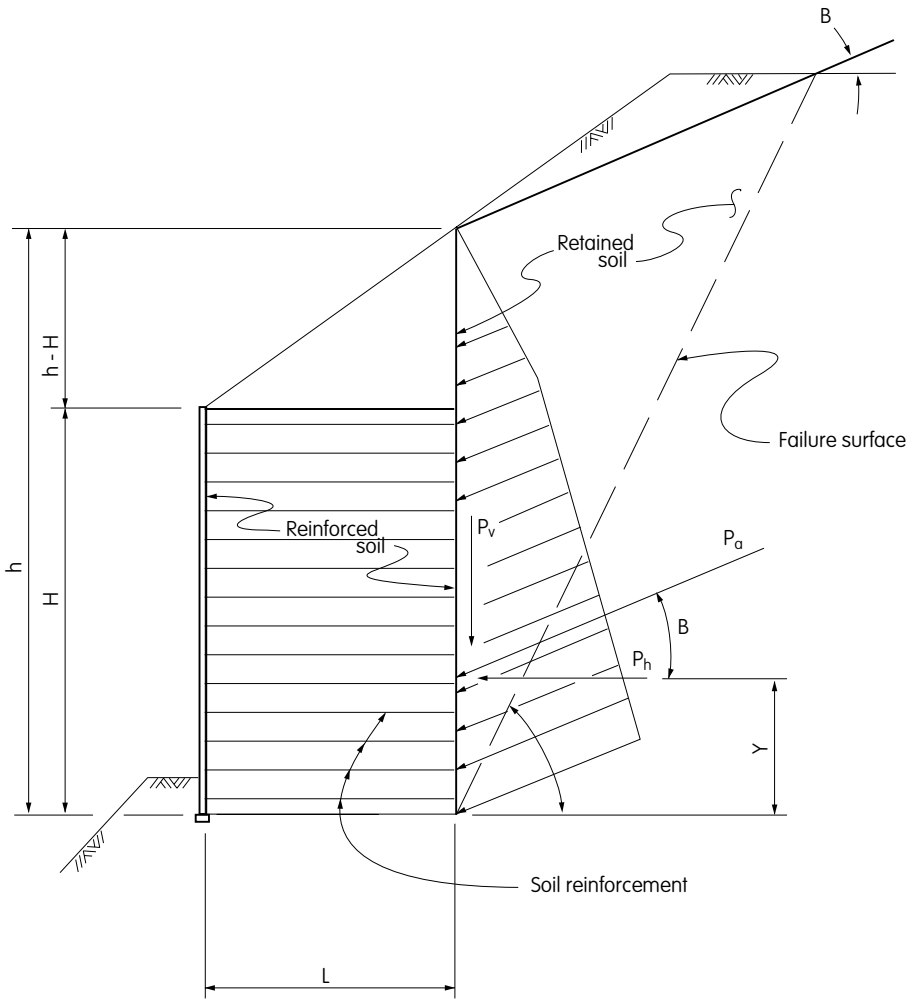


**Figure 5.5.5.8-3 Lateral Earth Pressure Distribution and Resultant for MSE Wall with Broken Back Backfill Surface**

where:

$P_a$ = active lateral earth pressure resultant per length of wall under consideration determined by Rankine theory (KIP)

$P_h$ = horizontal component of, $P_a$ (KIP)

$P_v$ = vertical component of, $P_a$ (KIP)

$H$ = design height of wall (FT)

$h$ = height of pressure surface at back of wall (FT)

$L$ = length of soil reinforcement (FT)

$y$ = height above base of wall to location of point of application of, $P_a$, see Article C5.5.5.1 (FT)

$b$ = slope of backfill surface behind wall (DEG)

$B$ = notional slope of backfill associated with broken back backfill surface behind wall (DEG)

### 5.5.5.9 Lateral Earth Pressures For Prefabricated Modular Walls

The lateral active earth pressure for the design of prefabricated modular walls may be determined using Coulomb's theory as presented in Figures 5.5.5.3-1 and 5.5.5.3-2c.

### 5.5.5.10 Surcharge Loads

#### *5.5.5.10.1 Uniform Surcharge Loads*

Where a uniform surcharge is present, a constant horizontal earth pressure shall be added to the basic lateral earth pressure. This constant earth pressure may be taken as:

$$D_p = k_s q_s \tag{5.5.5.10.1-1}$$

where:

$D_p$ = constant horizontal earth pressure due to uniform surcharge (KSF)

$k_s$ = coefficient of lateral earth pressure due to surcharge

$q_s$ = uniform surcharge applied to the wall backfill surface within the limits of the active failure wedge (KSF)

For active earth pressure conditions, $k_s$ , shall be taken as, $k_a$, and for at-rest conditions, $k_s$ , shall be taken as, $k_o$.

#### *5.5.5.10.2 Uniformly Loaded Strip Parallel to Wall*

The horizontal earth pressure distribution and resultant applied to the back of a wall due to a uniformly loaded strip parallel to the wall may be taken as:

$$\Delta_{ph} = \frac{2p}{\pi}\left\{\frac{\pi}{180}\left[\operatorname{arccot}\frac{z}{a+b} - \operatorname{arc\,cot}\frac{z}{b}\right] - \left[\frac{z}{(a+b)+\frac{z^2}{(a+b)}} - \frac{z}{b+\frac{z^2}{b}}\right]\right\} \tag{5.5.5.10.2-1}$$

$$P = \frac{ph}{90}\left[\arctan\frac{(a+b)}{h} - \arctan\frac{b}{h}\right] \tag{5.5.5.10.2-2}$$

$$\overline{z} = \frac{h^2\left(\arctan\frac{(a+b)}{h} - \arctan\frac{b}{h}\right)}{2h\left(\arctan\frac{(a+b)}{h} - \arctan\frac{b}{h}\right)} + \frac{(a+b)^2\left(90 - \arctan\frac{(a+b)}{h}\right)}{2h\left(\arctan\frac{(a+b)}{h} - \arctan\frac{b}{h}\right)} - \frac{b^2\left(90 - \arctan\frac{b}{h}\right) - 57.30ah}{2h\left(\arctan\frac{(a+b)}{h} - \arctan\frac{b}{h}\right)} \tag{5.5.5.10.2-3}$$

where:

$D_{ph}$ = horizontal earth pressure on the pressure surface at back of wall at a distance, $z$, from the wall backfill surface (KSF)

$z$ = vertical distance from the wall backfill surface to the level at which $D_{ph}$ is being determined (KT)

$P$ = horizontal earth pressure resultant acting on the pressure surface at back of wall (KIPS/FT)

$\bar{z}$ = vertical distance from the wall backfill surface to the level at which the horizontal earth pressure resultant is applied (FT)

$h$ = height of pressure surface at back of wall (FT)

$p$ = load intensity of strip load parallel to wall (KSF)

$a$ = width of strip load (FT)

$b$ = distance from pressure surface to near edge of strip load (FT)

## C5.5.5.10.2

Equations 5.5.5.10.2-1 and 5.5.5.10.2-2 are based on the assumption that the wall does not move (i.e. walls which have a high degree of structural rigidity or restrained at the top combined with an inability to slide in response to applied loads). For flexible walls, this assumption can be conservative.

### *5.5.5.10.3 Point Load*

The horizontal earth pressure applied to the back of a wall due to a vertical point load my be taken as:

$$\Delta_{ph} = \frac{p}{\pi}\left[\frac{3x^2 z}{R^5} - (1-2v)\left\{\frac{x^2 - y^2}{Rr^2(R+z)} + \frac{y^2 z}{R^3 r^2}\right\}\right]$$

(5.5.5.10.3-1)

where:

$P$ = vertical point load (KIP)

$R$ = radial distance from point of load application to the point on the back of the wall at which, $D_{ph}$, is being determined where, $R = (x^2 + y^2 + z^2)^{0.5}$ (FT)

$x$ = horizontal distance from the point of load application to the back of the wall (FT)

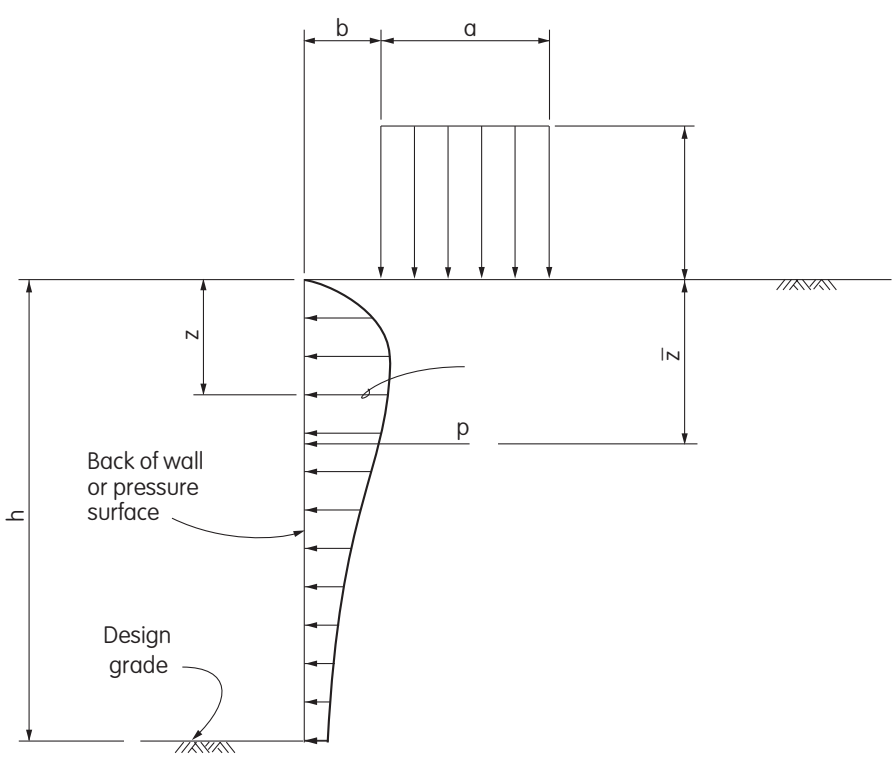


**Figure 5.5.5.10.2-1 Horizontal Earth Pressure on Wall Due to Uniformly Loaded Strip Parallel to Wall**

$y$ = horizontal distance from the point on the back of the wall at which, $D_{ph}$ , is being determined to a plane which is perpendicular to the wall and which passes through the point of load application measured along the back of wall (FT).

$z$ = vertical distance from the point of load application to the elevation of the point on the back of the wall at which, $D_{ph}$ , is being determined (FT)

$r$ = $(x^2 + y^2)^{0.5}$ (FT)

$v$ = Poisson's ratio (DIM)

## C5.5.5.10.3

Equation 5.5.5.10.3-1 is based on the assumption that the wall does not move. For flexible walls, this assumption can be conservative.

Poisson's ratio for soils varies from about 0.25 to 0.5, with lower values more typical for granular and stiff cohesive soils and higher values more typical for soft cohesive soils.

The horizontal earth pressure on a wall due to other vertical load conditions may be approximated by superimposing the effects of closely spaced point loads which are equivalent to the actual load in magnitude and distribution.

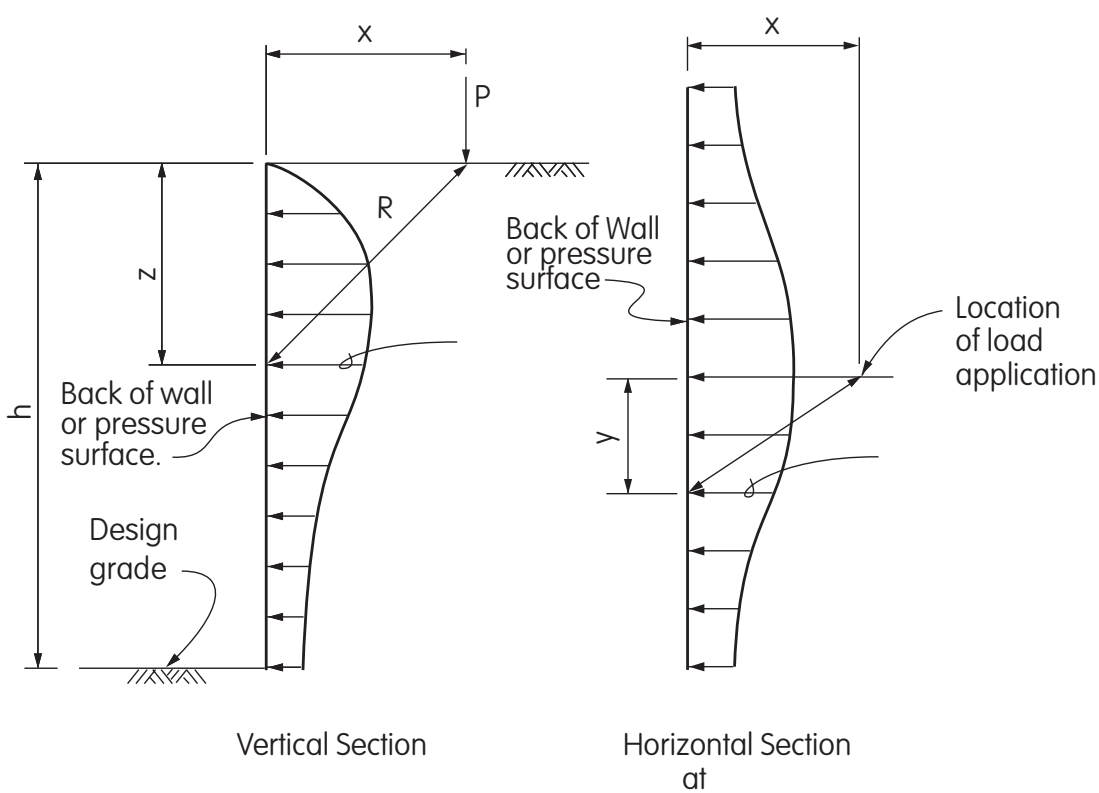


**Figure 5.5.5.10.3-1 Horizontal Earth Pressure on Wall Due to Point Load**

### *5.5.5.10.4 Uniformly Loaded Strip Parallel to Wall – Flexible Walls*

For flexible walls, i.e. walls relatively free to move laterally in response to applied horizontal loads, vertical strip loads may be distributed with depth as shown in Figure 5.5.5.10.4-1 and horizontal forces may be distributed with depth as shown in Figure 5.5.5.10.4-2.

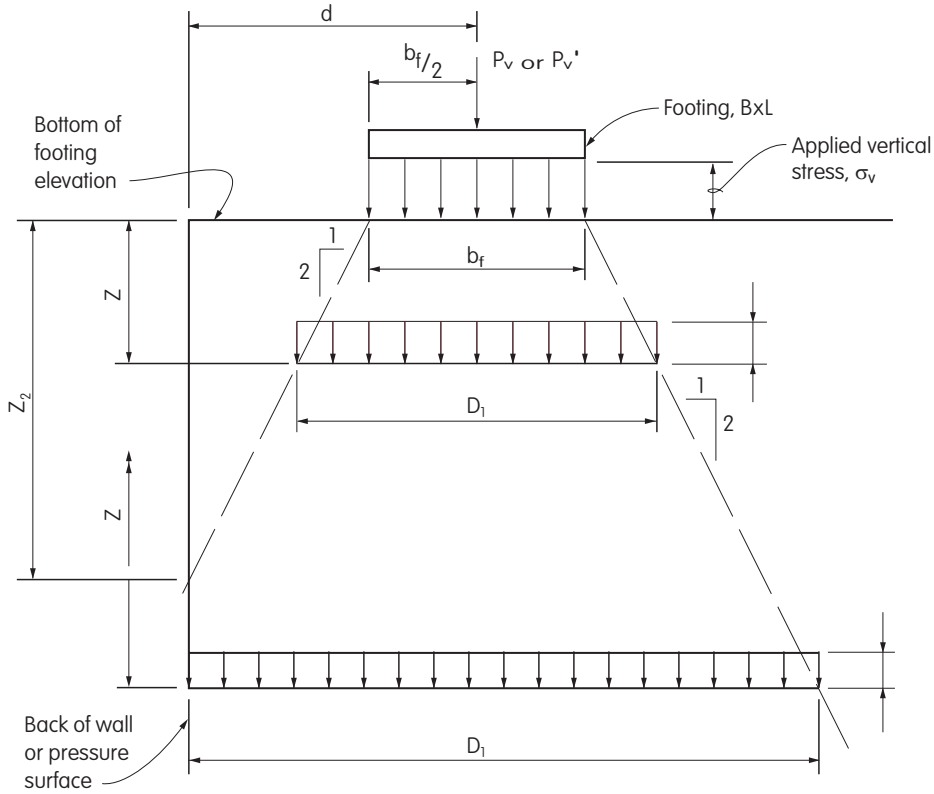


For $z \le z_2$, $D_1 = b_1 + z$

For $z \ge z_2$, $D_1 = \dfrac{b_1 + z}{2} + d$

For continuous footing or strip load,

$$\Delta s_v = \frac{p_v}{D_1}$$

For isolated footing load,

$$\Delta\sigma_v = \frac{p'_v}{D_1(L+z)}$$

For point load, $\Delta s_v = \dfrac{p_v}{(D_1)^2}$, $(b_f = 0)$

where:

$D_1$ = effective width for determining vertical stress at any depth due to applied vertical load (FT)

$b_f$ = width of applied vertical stress (FT). For concentrically loaded footings, $b_f = B$. For eccentrically loaded footings, $b_f = B\text{-}2e'$, where,

**Figure 5.5.5.10.4-1 Distribution of Vertical Stress with Depth Due to Applied Vertical Stress ( Continued )**

$e'$, is the eccentricity of the footing load, but $b_f$ shall not be greater than $B$.

$B$ = width of footing (FT)

$L$ = length of footing (FT)

$P_v$ = vertical load per unit length of continuous footing or strip load (KIPS/FT)

$P_v'$ = vertical load on isolated rectangular footing or point load (KIPS)

$s_v$ = applied vertical stress (KSF)

$Ds_v$ = vertical stress at depth, $z$, due to applied vertical stress (KSF)

$z$ = vertical distance from bottom of footing elevation or level of applied vertical stress to level at which, $Ds_v$, is being determined (FT)

$z_2$ = depth at which inclined plane for determination of effective width, $D_1$, intersects the back of wall or pressure surface (FT)

$d$ = distance from center of width, $b_f$, to back of wall or pressure surface (FT)

**Figure 5.5.5.10.4-1 Distribution of Vertical Stress with Depth Due to Applied Vertical Stress ( Continued )**

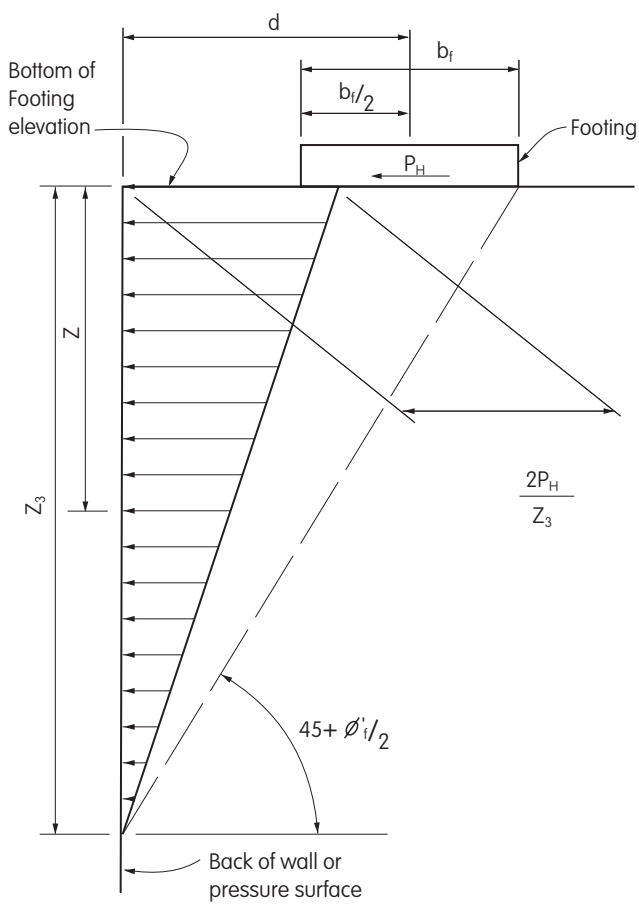


**Figure 5.5.5.10.4-2 Distribution of Horizontal Stress with Depth Due to Applied Horizontal Force ( Continued )**

where:

$b_f$ = width of footing overwhich horizontal force, $P_H$, is distributed, ($b_f = B - 2e'$, but not greater $B$) (FT)

$B$ = width of footing (FT)

$e'$ = eccentricity of vertical load on footing (FT)

$P_H$ = horizontal force at base of continuous footing per unit length of footing (KIPS/FT)

$Ds_h$ = horizontal stress at depth, $z$, due to horizontal force at base of continuous footing (KSF)

$Ds_{h\,max}$ = maximum value for, $Ds_h$, which occurs at the bottom of footing elevation (KSF)

$z$ = vertical distance from bottom of footing elevation or level of applied horizontal force to level at which, $Ds_h$, is being determined (FT)

$z_3$ = depth of back of wall or pressure surface overwhich horizontal stress, $Ds_h$, from the applied horizontal force is distributed, determined as shown in figure (FT)

$ø'_f$ = effective friction angle of soil (DEG)

**Figure 5.5.5.10.4-2 Distribution of Horizontal Stress with Depth Due to Applied Horizontal Force (Continued)**

### *5.5.5.10.5 Live Load Surcharge*

A live load surcharge shall be applied where vehicular load is expected or possible to act on the surface of the backfill within a distance equal to the wall height behind the back face of the wall or pressure surface.

The increase in horizontal pressure due to live load surcharge may be taken as:

$$D_p = k\gamma_s h_{eq} \qquad (5.5.5.10.5\text{-}1)$$

where:

$D_p$ = constant horizontal earth pressure due to live load surcharge (KSF)

$\gamma_s$ = total unit weight of soil (KCF)

$k$ = coefficient of lateral earth pressure (DIM)

$h_{eq}$ = equivalent height of soil for vehicular load (FT)

$\gamma_s h_{eq} \geq 0.240$ KSF for highway loading

If the vehicular loading is transmitted through a structural slab, which is also supported by means other than earth, a corresponding reduction in the surcharge loads may be permitted.

### 5.5.5.11 Lateral Earth Pressures for Restrained Abutments

For abutments, such as rigid frame abutments or proped abutments, which do not deflect sufficiently to create an active wedge in the backfill soil, the lateral earth pressure distributions shown in Figure 5.5.5.11-1 shall be used whichever controls. Additionally live load surcharge effects shall be applied.

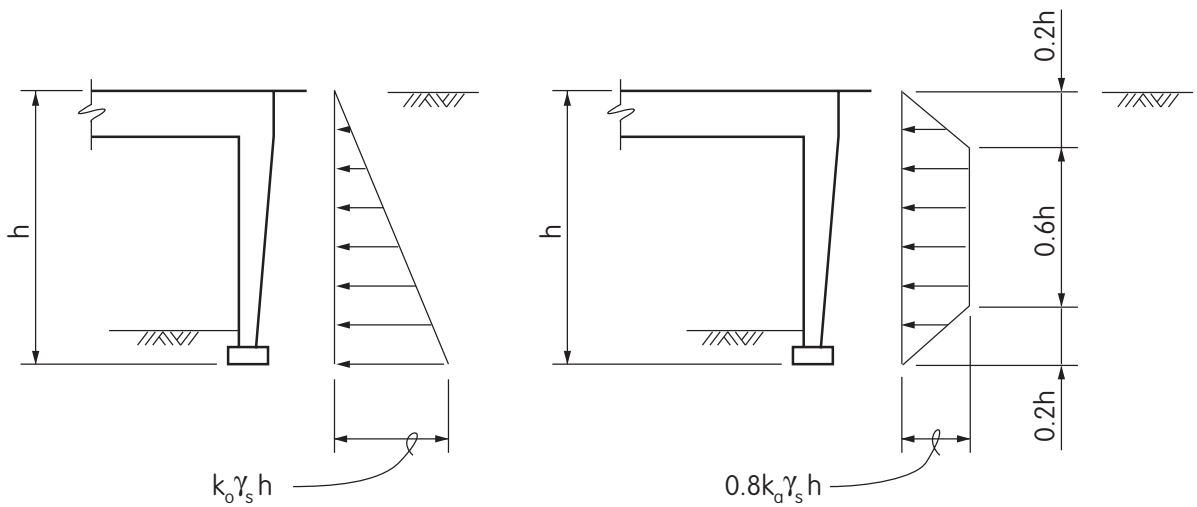


where:

$k_a$ = coefficient of active lateral earth pressure (DIM)

$k_o$ = coefficient of at-rest lateral earth pressure (DIM)

$g_s$ = unit weight of soil (KCF)

$h$ = height of pressure surface at back of wall (FT)

**Figure 5.5.5.11-1 Lateral Earth Pressure at Restrained Abutments**

### 5.5.5.12 Reduction Due to Earth Pressure

For culverts and bridges and their components where earth pressure may reduce effects caused by other loads and forces, such reduction shall be limited to the extent earth pressure can be expected to be permanently present. In lieu of more precise information, 50% of the earth pressure effects may be used to reduce the effects of other loads.

## 5.6 RIGID GRAVITY AND SEMI-GRAVITY WALL DESIGN

### 5.6.1 Design Terminology

Refer to Figure 5.6.1-1 for terminology used in the design of rigid gravity and semi-gravity retaining walls.

### 5.6.2 Footing Embedment

Refer to Articles 4.4.5.1 and 4.4.5.2 for minimum requirements for depth of embedment of footings of rigid gravity and semi-gravity retaining walls. Additionally, footings shall be founded at a depth that provides a minimum of 1.5 feet of cover.

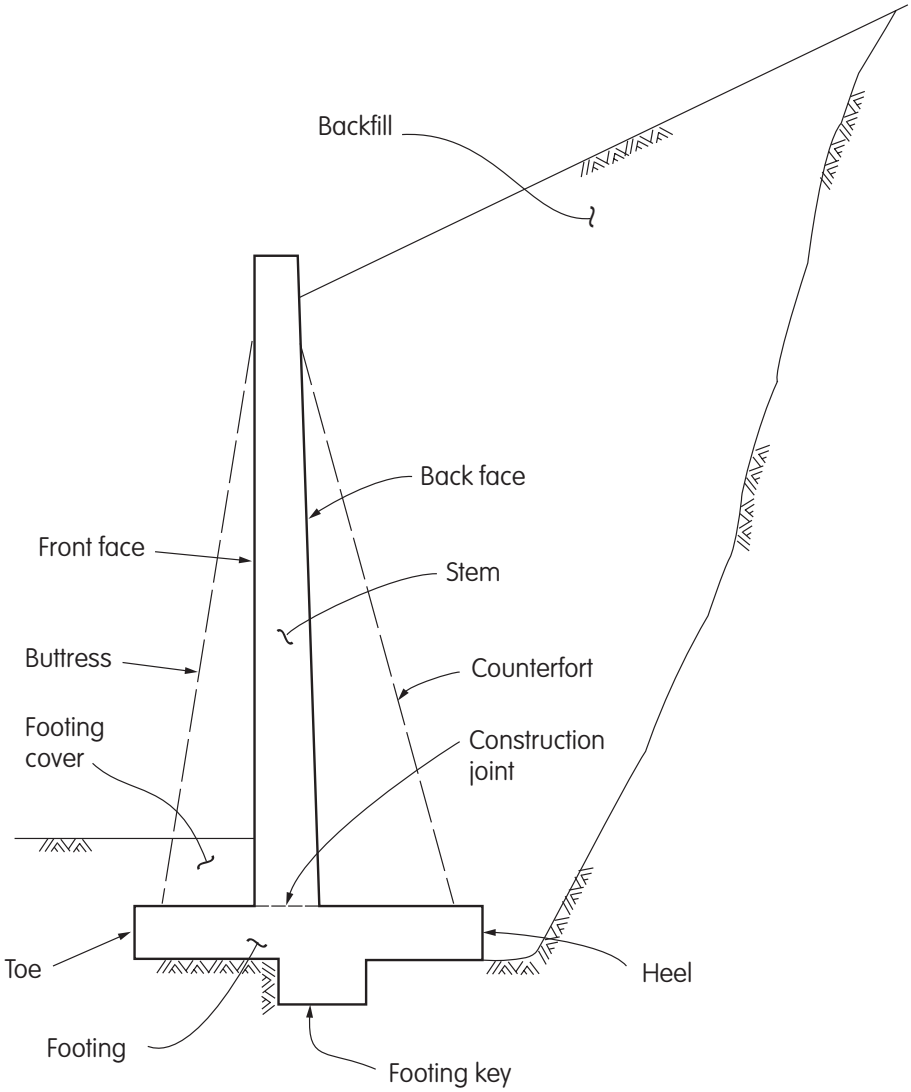


**Figure 5.6.1-1 Terms Used in Design of Rigid Gravity and Semi-Gravity Retaining Walls**

### 5.6.3 Earth Pressure, Water Pressure and Surcharge Loadings

Lateral earth pressure loading on rigid gravity and semi-gravity retaining walls is a function of the type and condition of soil backfill, the slope of the ground surface surface behind the wall, the friction between the wall and soil, and the ability of the wall to translate or rotate about its base. For walls with footing keys of depth, $Dk$, which is greater than the distance, $Bk$, from the back face of the footing key to the backface or heel of the wall footing, the lateral earth pressure loading shall extend to the level of the bottom of the footing key. Refer to Articles 5.5.5.1-5.5.5.5 for determination of appropriate design lateral earth pressures.

No vertical wall structure shall be designed for less than an equivalent fluid with a unit weight of 36 pounds per cubic foot, except that the maximum foundation pressure or maximum pile reactions acting on the heels of wall footings shall be determined by using an equivalent fluid with a unit weight of 27 pounds per cubic foot.

In developing the total design lateral pressures, the lateral pressure due to traffic, permanent point and line surcharge loads, backfill compaction, or other types of surcharge loads shall be added to the design lateral earth pressure. Refer to Article 5.5.5.10 for the determination of design lateral pressures due to surcharge loads.

The resistance due to passive lateral earth pressure in front of the wall shall be neglected unless the wall extends well below the depth of frost penetration, scour or other types of disturbance. Development of passive lateral earth pressure in the soil in front of a rigid wall requires an outward rotation of the wall about its toe or other movement of the wall into the soil. The magnitude of movement required to mobilize passive pressure is a function of the soil type and condition in front of the wall as defined in Table C5.5.1-1.

The provisions of Article 5.5.3 shall apply.

When groundwater levels may exist above the bottom of wall footing elevation, consideration shall be given to the installation of a drainage blanket and piping at the wall excavation face to intercept the groundwater before it saturates the wall backfill.

In general, all wall designs should provide for the thorough drainage of the back-filling material.

### 5.6.4 Structure Dimensions and External Stability

Gravity and semi-gravity walls shall be proportioned to ensure stability against possible failure modes by satisfying the following stability criteria:

- Sliding – Factor of safety, $FS_{SL} \geq 1.5$
- Overturning – Maximum eccentricity of the resultant force acting on footing base

  Wall footing on soil, $e_{\max} \leq \dfrac{B}{6}$

  Wall footing on rock, $e_{\max} \leq \dfrac{B}{4}$
- Bearing capacity –

  Wall footing on soil, $FS \geq 3.0$ see Article 4.4.7

  Wall footing on rock, $FS \geq 3.0$ see Article 4.4.8

#### 5.6.4.1 Sliding Stability

In the determination of the, $FS_{SL}$, the effect of passive lateral earth pressure resistance in front of a wall footing or a wall footing key shall only be considered when competent soil or rock exists which will not be removed or eroded during the structure life. Not more than 50 percent of the available passive lateral earth pressure shall be considered in determining the, $FS_{SL}$.

Refer to Figure 5.6.4.1-1 for procedures to determine the factor of safety against sliding. For wall footings with a footing key, both horizontal and inclined sliding planes should be considered to determine the minimum factor of safety against sliding. For walls with sloping footings procedures similar to those shown in Figure 5.6.4.1-1 should be used to determine the factor of safety against sliding.

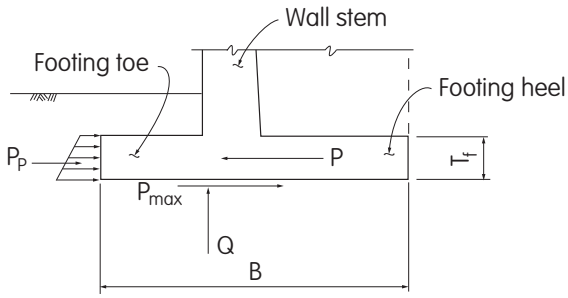


$$FS_{SL} = \frac{P_{max} + P_p}{p}$$

a. Wall footing without footing key

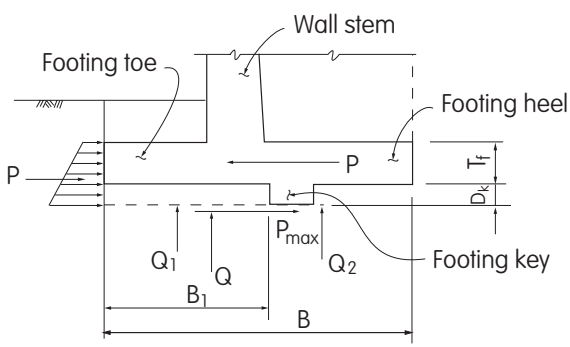


$$Q = Q_1 + Q_2$$

$$FS_{SL} = \frac{P_{max} + P_p}{P}$$

b. Wall footing with footing key and horizontal sliding plane

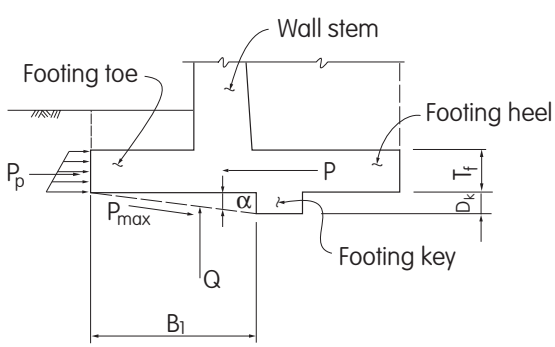


$$\alpha = \arctan \frac{D_k}{B_1}$$

$$P_{max} = (Q\cos\alpha - P_p \sin\alpha)\tan\phi'_f + \frac{B_1}{\cos\alpha} c$$

$$FS_{SL} = \frac{(P_{max} + P_p \cos\alpha - Q\sin\alpha)}{P\cos\alpha}$$

c. Wall footing with footing key and inclined sliding plane

where:

| | | |
|---|---|---|
| $P$ | = | tangential component of force on wall footing (KIP) |
| $P_{max}$ | = | maximum resisting force between wall footing base and foundation soil or rock against sliding failure (KIP) |
| $P_p$ | = | passive lateral earth pressure, not to exceed 50 percent of the available passive lateral earth pressure (KIP) |
| $Q$ | = | normal component of force on wall footing (KIP) |
| $Q_1$ | = | normal component of force on wall footing within distance $B_1$ (KIP) |
| $Q_2$ | = | normal component of force on wall footing within distance $(B - B_1)$ (KIP) |
| $B$ | = | width of wall footing (FT) |
| $B_1$ | = | distance from toe of footing to front face of footing key (FT) |
| $B'$ | = | width of wall footing actually in compression $(B' = B - 2e)$ (FT) |
| $T_f$ | = | wall footing thickness (FT) |
| $D_k$ | = | depth of wall footing key (FT) |
| $\phi'_f$ | = | effective angle of internal friction of foundation soil (DEG) |
| $\delta$ | = | angle of friction between wall footing and foundation soil, or rock (for footings on soil, $\delta$, may be taken as, $\frac{2}{3}\phi'_f$) (DEG) |
| $c$ | = | cohesion of foundation soil (KSF) |
| $c_a$ | = | adhesion between wall footing and foundation soil or rock (KSF) |
| $\alpha$ | = | angle between bottom of wall footing and a plane passing through lower front corner of the footing and the lower front corner of the footing key (DEG) |

**Figure 5.6.4.1-1 Procedures to Determine the Factor of Safety Against Sliding**

### 5.6.4.2 Overturning

Stability of a wall against overturning is evaluated by determining the eccentricity of the resultant force acting on the footing base.

For walls with a footing with no footing key or with a footing with a shallow footing key, the lateral resisting forces are generally not considered in determining the eccentricity of the resultant force acting on the footing base. For walls with a footing with a deep footing key the lateral resisting forces shall be considered in determining the eccentricity of the resultant force acting on the footing base. In the determination of the eccentricity, the horizontal resisting force acting on the toe of the footing shall not exceed the at-rest lateral earth pressure.

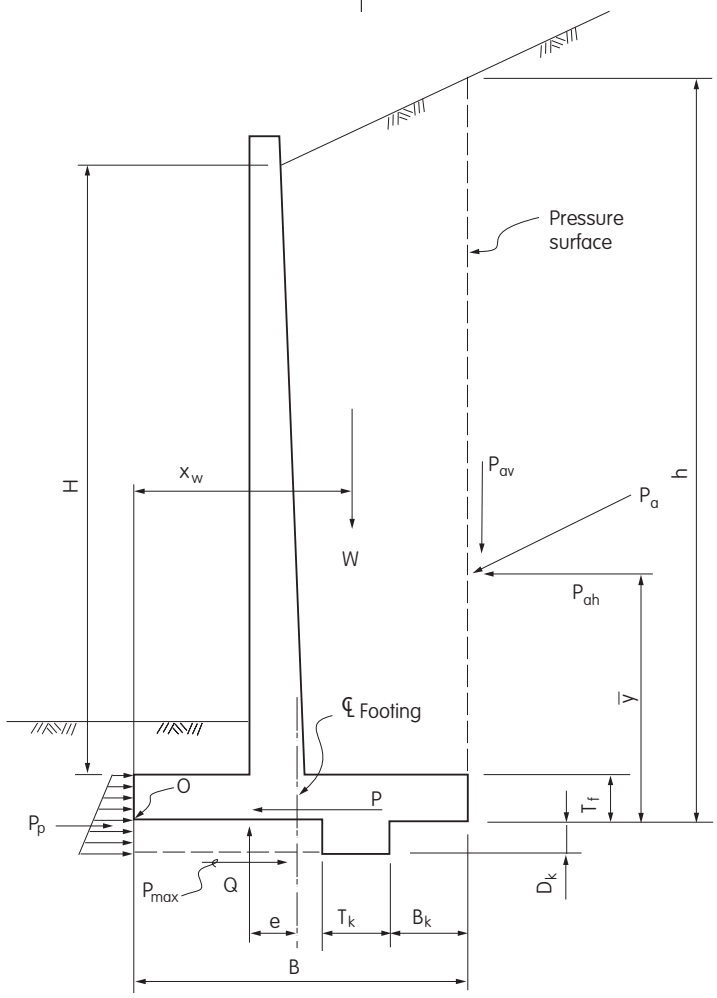


$D_k \leq T_f$

$B_k > D_k$, when $B_k \leq D_k$, the pressure surface of height, $h$, extends to bottom of footing key

$$e = \frac{\frac{QB}{2} + P_{ah}\bar{y} - P_{av}B - W_{xw}}{Q}$$

**Figure 5.6.4.2-1 Procedures to Determine the Eccentricity of the Resultant Force Acting on the Wall Footing Base ( Continued )**

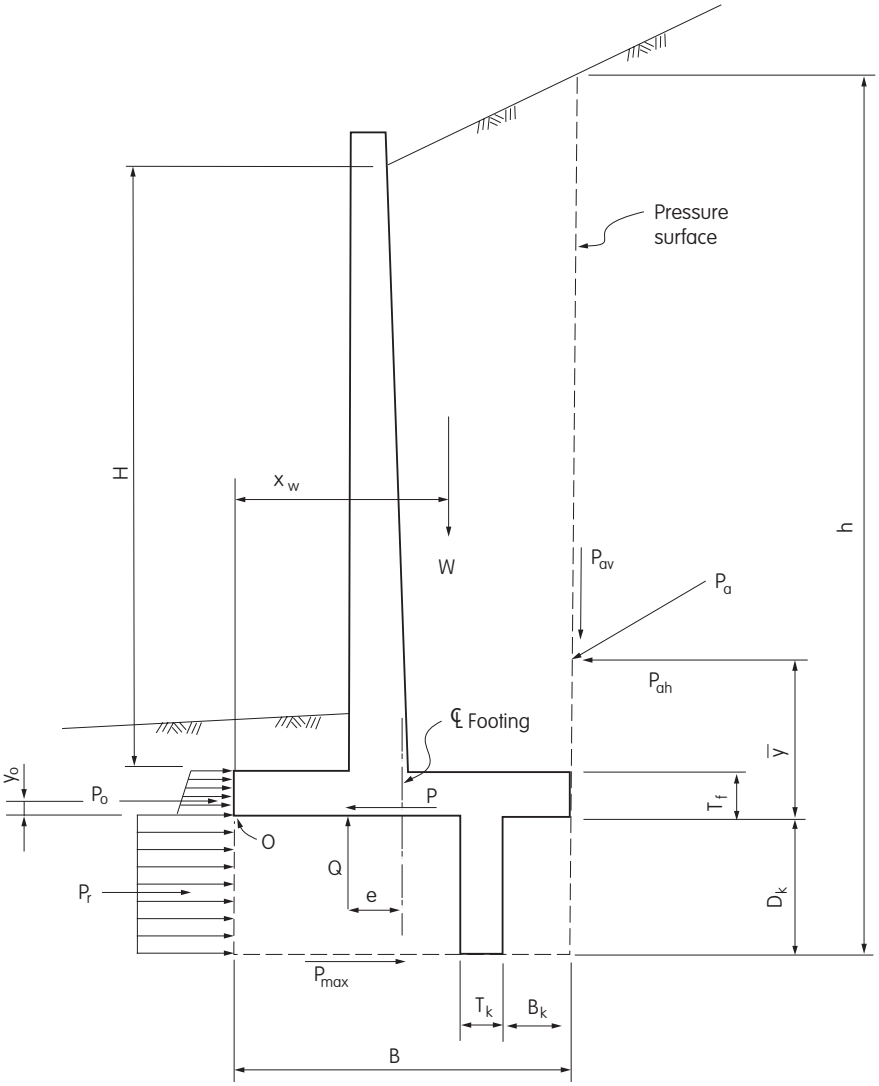


$P_r = P - P_o$, and $(P_r - P_{max}) \le 0.5P_p$

$B_k \le D_k$, when $B_k > D_k$, the pressure surface of height, $h$, extends to the bottom of the footing.

$$e = \frac{\frac{QB}{2} + P_{ah}\bar{y} - P_{av}B - Wx_w - P_o y_o + P_r\left(\frac{D_k}{2}\right)}{Q}$$

b. Wall with deep footing key

**Figure 5.6.4.2-1 Procedures to Determine the Eccentricity of the Resultant Force Acting on the Wall Footing Base ( Continued )**

where:

$P_a$ = lateral earth pressure resultant per unit width of wall acting on pressure surface at back of wall (KIPS/FT)

$P_{av}$ = vertical component of, $P_a$ (KIPS/FT)

$P_{ah}$ = horizontal component of, $P_a$ (KIPS/FT)

$\bar{y}$ = vertical distance from bottom of footing to level of application of, $P_a$ (FT)

$h$ = height of pressure surface at back of wall (FT)

$W$ = resultant weight of wall, including any footing key, the backfill above the footing, and any surcharge loads acting above the footing width per unit width of wall (KIPS/FT)

$x_w$ = horizontal distance from toe of footing to location at which, $W$, acts.

$e$ = eccentricity of resultant force acting on footing base from center of footing (FT)

$H$ = wall design height (FT)

$T_k$ = width of wall footing key (FT)

$B_k$ = distance from heel of footing to back face of footing key (FT)

$P_r$ = resultant force of uniformly distributed lateral resisting pressure per unit width of wall acting over depth of footing key required to provide equilibrium to force, $P$ (KIPS/FT) $P_r = P - P_o$

$P_o$ = at-rest lateral earth pressure resultant per unit with of wall acting on the toe of the wall footing (KIPS/FT)

$y_o$ = vertical distance from bottom of wall footing to the level of application of, $P_o$ (FT)

For other variables, see Figure 5.6.4.1-1

**Figure 5.6.4.2-1 Procedures to Determine the Eccentricity of the Resultant Force Acting on the Wall Footing Base ( Continued )**

### 5.6.4.3 Wall Foundations

See Article 4.45 for procedures to determine the required embedment depth of wall foundations; Articles 4.4.7 and 4.4.8, respectively, for procedures to design spread footings on soil and rock; and Articles 4.5 and 4.6, respectively, for procedures to design driven pile and drilled shaft foundations.

## 5.6.5 Structure Design

Structural design of individual wall elements shall be by the service load design method except in special cases when earthquake forces are considered in which case the load factor design method may be used. A wall supporting a soundwall is a special case where earthquake forces should be considered.

### 5.6.5.1 Wall Footings

The rear projection or heel of footings shall be designed to support the entire weight of the superimposed backfill, surcharge loads, and a portion of the vertical component of the lateral earth pressure acting on the pressure surface located at the heel of the footing, unless a more exact method is used. The footing of cantilever walls shall be designed as cantilevers supported by the wall stem. The footing of counterforted and buttressed walls shall be designed as fixed or continuous beams of spans equal to the distance between counterforts or buttresses.

The critical sections for bending moments in footings shall be taken at the front and back faces of the wall stem. The critical sections for shear in the footing shall be taken at a distance, d, from the front face of the wall stem for the toe section and at the back face of the wall stem for the heel section (see Aritcle 8.16.6 when concentrated loads are present).

#### 5.6.5.2 Footing Keys

Shallow unreinforced footing keys shall be proportioned such that the key width is at least twice the key depth. Deep reinforced footing keys shall be designed as cantilevers supported at the bottom of the footing and they shall be designed for the load produced by the force, $P_R$, shown in Figure 5.6.4.2-1b.

#### 5.6.5.3 Wall Stems

The wall stems of cantilever walls shall be designed as cantilevers supported at the footing. The face walls of counterfort and buttress walls shall be designed as fixed or continuous beams. The face walls shall be securely anchored to the supporting counterforts or buttresses by means of adequate reinforcement.

Axial loads (including the weight of the wall stem and frictional forces due to backfill acting on the wall stem) shall be considered in addition to the bending due to eccentric vertical loads, surcharge loads and lateral earth pressure if they control the design of the wall stems.

#### 5.6.5.4 Counterforts and Buttresses

Counterforts shall be designed as rectangular beams. In connection with the main tension reinforcement of counterforts, there should be a system of horizontal and vertical bars or stirrups to anchor the face walls to the counterfort. These stirrups should be anchored as near to the outside faces of the face walls, and as near to the bottom of the footing as practicable.

#### 5.6.5.5 Reinforcement

Except in gravity walls, not less than 0.20 square inches per foot of height or length shall be provided in the horizontal and vertical directions near the exposed surfaces not otherwise reinforced to resist the formation of temperature and shrinkage cracks.

Tension reinforcement at the bottom of the heel shall be provided if required during the construction stage prior to wall backfill placement. The adequacy of the reinforcement shall be checked due to the dead load of the stem and any other vertical loads applied to the stem prior to backfilling.

#### 5.6.5.6 Expansion and Contraction Joints

Contraction joints shall be provided at intervals not exceeding 24 feet and expansion joints at intervals not exceeding 96 feet for gravity or reinforced concrete walls. Expansion joints shall be constructed with a joint filling material of the appropriate thickness to ensure the functioning of the joint and they shall be provided with a waterstop capable of functioning over the anticipated range of joint movements.

#### 5.6.5.7 Backfill

The backfill material behind all retaining walls shall be free draining, nonexpansive, noncorrosive material and shall be drained by weep holes with pervious material or other positive drainage systems, placed at suitable intervals and elevations. For counterfort walls, there shall be at least one drain for each pocket formed by the counterforts.

Silts and clays shall not be used for backfill unless suitable design procedures are followed and construction control measures are incorporated in the construction documents to account for their presence.

#### 5.6.5.8 Overall Stablility

Refer to Article 5.2.2.3.

## 5.7 NONGRAVITY CANTILEVERED WALL DESIGN

### 5.7.1. Design Terminology

A nongravity cantilevered wall includes an exposed design height, ***H***, over which soil is retained and an embedded depth, ***D***, which provides lateral support, see Figure 5.7.1-1.

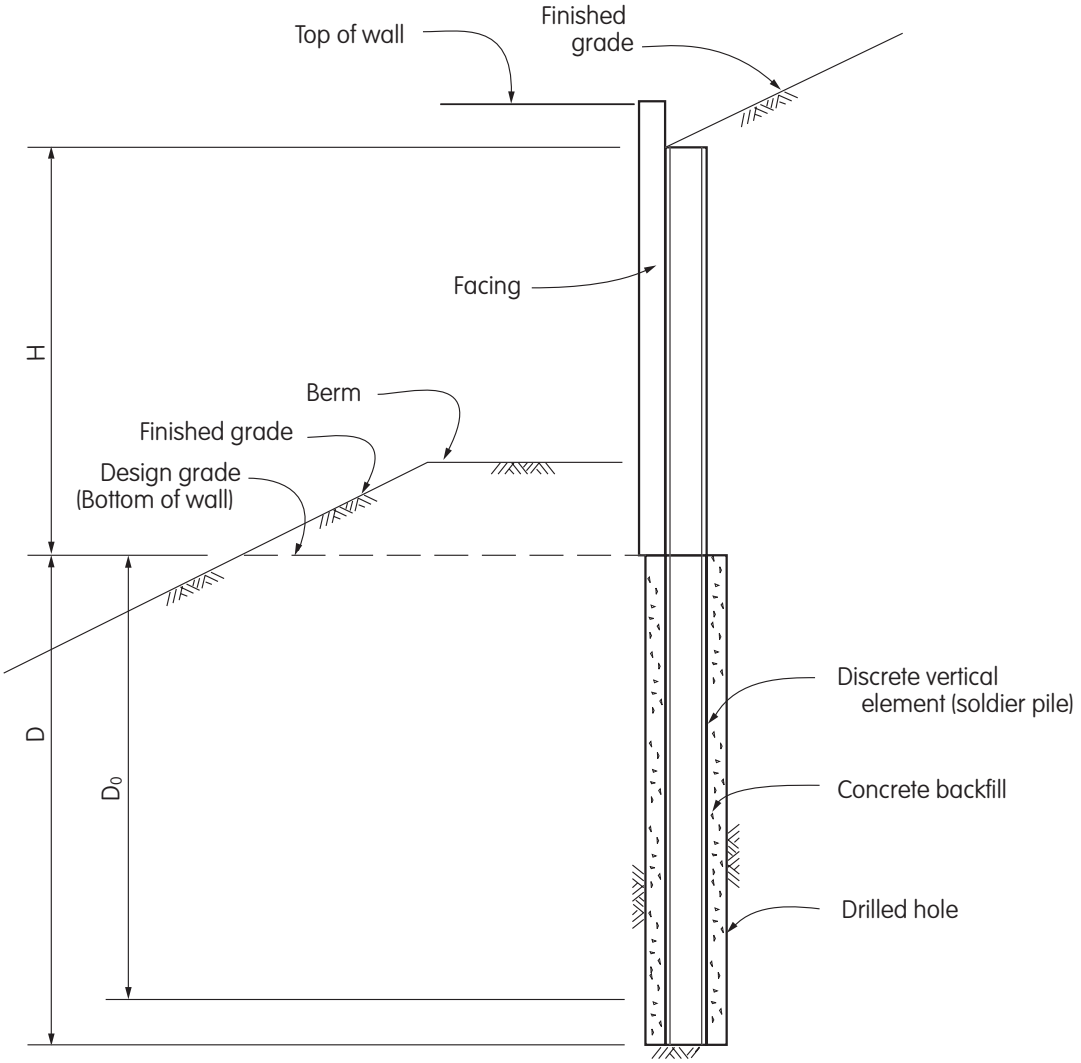


where:

***H*** = design height of wall
***D*** = depth of embedment of vertical wall elements for nongravity cantilevered walls (FT)
$\boldsymbol{D_o}$ = calculated embedment depth of vertical wall elements for non-gravity cantilevered walls required to provide the desired factor of safety by the simplified analysis method (FT)

**Figure 5.7.1-1 Terms used in the Design of Nongravity Cantilevered Retaining Walls**

This type wall may consist of discrete vertical elements, (soldier piles) which extend over the height, ***H***, and embedment, ***D***, with facing elements over the height, ***H***, which span between the discrete vertical elements or it may consist of continuous vertical elements (sheet piles), which extend over the height, ***H***, and embedment, ***D***, providing both the facing and lateral support.

### 5.7.2 Loading

The active lateral earth pressure distributions provided in Article 5.5.5.6 may be used for design. When determining the value for, $k_a$, for granular soils, the Coulomb theory should be used with the value for the wall friction angle, , equal to zero.

The lateral pressure due to traffic, permanent point and line surcharge loads, backfill compaction or other types of surcharge loads shall be added to the active lateral earth pressure. Refer to Article 5.5.5.10 for the determination of design lateral pressures due to surcharge loads.

### 5.7.3 Wall Movement

The effects of wall movements on adjacent facilities shall be considered in the selection of the design lateral earth pressures. Walls for which little or no movement can be tolerated should be designed for at-rest lateral earth pressure.

### 5.7.4 Water Pressure and Drainage

The provisions of Article 5.5.3 shall apply. Seepage shall be controlled by the installation of a drainage medium behind the facing with outlets at or near the bottom of the wall facing. Drainage panels, when used, shall maintain their drainage characteristics under the design lateral earth pressures and surcharge loadings, and shall extend from the base of the wall to a level not more than 3 feet below finished grade at the top of the wall. When timber lagging members are used for the facing, the provision of gaps between the lagging members is generally sufficient to control seepage. For lagging members less than ***6*** inches thick, ***3/8*** inch gaps may be used, for lagging members ***6*** inches or more in thickness, ***½*** inch gaps may be used.

Where thin drainage panels are used behind walls, saturated or moist soil behind the panels may be subject to freezing and expansion. In such cases, insulation shall be provided on the walls to prevent freezing of the soil, or consideration should be given during wall design to the pressures which may be exerted on the wall by frozen soil.

### 5.7.5 Passive Resistance

The passive lateral earth pressure distributions provided in Article 5.5.5.6 may be used for design. When determining the value for, $k_p$, for granular soils, the provisions of Articles 5.5.5.4 and 5.5.5.5 may be used.

The embedment of vertical wall elements shall be designed to support the full design lateral earth, surcharge and water pressures. In determining the embedment depth to mobilize passive lateral resistance, consideration shall be given to planes of weakness (e.g., slickensides, bedding planes, and joint sets) that could reduce the strength of the soil or rock determined by field or laboratory tests. Embedment in intact rock including massive to appreciably jointed rock which should not fail through a joint surface, shall be based on the shear strength, $s_m$, of the rock mass.

### 5.7.6 Structure Dimensions and External Stablility

Nongravity cantilevered walls shall be dimensioned to ensure stability against passive failure of the embedded vertical elements such that the factor of safety against overturning about he bottom of the embedded vertical elements is greater than or equal to ***1.5***, $FS_{OT} \geq 1.5$, when the simplified lateral earth pressure distributions in Article 5.5.5.6 plus any additional surcharge and water pressures are used.

Where discrete vertical wall elements are used for support, the width, b, of each vertical element shall be assumed to equal the width of the flange or diameter of the structural element for driven sections or elements place in drilled holes which are backfilled with pea gravel or lean concrete and equal to the diameter of the drilled hole for sections encased in structural concrete backfill.

When determining the resultant lateral pressures, both active and passive, applied to the embedded portion of

discrete vertical elements in soil, an effective width of the vertical elements, $b'$, may be used. For walls with a facing that is continuous across the vertical elements the effective width shall not exceed two times the width of the vertical elements ($b' \leq 2b$). For walls with a facing that is simply supported at each vertical element the effective width shall not exceed three times the width of the vertical elements ($b' \leq 3b$). The effective width used for the vertical elements shall not exceed the center to center spacing of the vertical elements. When determining the resultant passive lateral pressure applied to the embedded portion of discrete vertical elements in rock, the width of the vertical element shall be used.

For vertical elements embedded in soil, the calculated embedment, $D_o$, shall be increased to determine the embedment to be used, $D$, so that,
$D \geq 1.1D_o$. For vertical elements embedded in rock, $D \geq D_o$ may be used.

For nongravity cantilevered walls with embedment in soil, the design height, H, shall be established so that the finished grade provides a berm in front of the wall face at least 4 feet wide measured from the face of the wall and provides a design grade at least 2 feet below finished grade measured at the face of the wall.

For nongravity cantilevered walls with embedment in rock the design height, H, shall be established so that stable conditions will be provided considering the nature of the rock and slope in front of the wall and the service life of the wall.

### 5.7.7 Structure Design

Structural design of individual wall elements shall be by the service load design method except in special cases, such as when earthquake forces are considered, in which case the load factor design method may be used.

The vertical support elements shall be designed for the full contributory lateral pressures and any vertical loads if they control the design.

Reinforced concrete facing elements both continuous and simply supported shall be designed for the full design lateral pressures, deadload, and any other vertical loads if they control the design.

Timber or steel facing elements (lagging members) simply supported at the vertical support elements may be designed for a reduced bending moment to account for soil arching except when retaining soft cohesive soils. When applicable the maximum design moment may be taken as $0.8$ times the calculated moment using the design lateral pressures. Timber facing elements should be constructed from stress-grade lumber which has been pressure treated with a perservative.

### 5.7.8 Traffic Barrier

When traffic barriers are placed at the top of nongravity cantilevered walls they shall be constructed on a support slab which is designed to resist the overturning due to the design horizontal impact load applied to the barrier. The support slab shall be designed so only horizontal and vertical forces are transmitted to the vertical support elements of the wall. The support slab shall be continuous the full length of the wall with no expansion joints. The horizontal forces from the support slab applied to the vertical support elements need to be considered in the design of these vertical support elements. The horizontal force from the support slab shall be applied to the top of the vertical support elements.
For discrete vertical support elements the minimum design force shall be 20 kips or 3.5 kips times the spacing of the vertical support elements whichever is greater but need not exceed 40 kips. For continuous vertical support elements the minimum force shall be 3.5 kips per foot. These design forces may be considered factored loads. The design lateral earth pressure from the retained soil need not be considered to act concurrently with the above design forces. The calculated embedment, $D_o$, shall provide a minimum factor of safety against overturning equal to 1.0 ( $FS_{OT} \geq 1.0$ ) for the above loading using the simplified analysis method.

When traffic barriers are placed at the top of nongravity cantilevered walls embedded in soil or rock, the minimum design height, $H$, shall be $6$ feet, and the minimum length of wall and barrier slab shall be $60$ feet.

### 5.7.9 Overall Stability

Refer to Article 5.2.2.3

When conducting a limiting equilibrium method of analysis, the passive resistance provided by any portion

of the wall vertical elements which extend below the failure surface being evaluated may be used in the analysis.

### 5.7.10 Corrosion Protection

Steel vertical support elements should be protected over their exposed height and a nominal distance below finished grade with an appropriate coating system.

Steel facing elements and fasteners should be protected with an appropriate coating system.

## 5.8. ANCHORED WALL DESIGN

### 5.8.1 Design Terminology

An anchored wall includes an exposed design height, ***H***, over which soil is retained and generally an embedded depth, ***D***, which may provide vertical and lateral support plus either structural anchors or ground anchors, see figures 5.8.1-1 and 5.8.1-2.

This type wall may consist of discrete vertical elements (soldier piles) which extend over the height, ***H***, and embedment, ***D***, with facing elements over the height, ***H***, which span between the discrete vertical elements and one or more levels of anchors or it may consist of continuous vertical elements (sheet piles), which extend over the height, ***H***, and embedment, ***D***, providing both the facing and vertical and lateral support and one or more levels of anchors or it may consist of multiple levels of continuous horizontal elements over the height, ***H***, with anchors at each level all of which provide the facing and vertical and lateral support.

The anchors may be either structural anchors or ground anchors. Structural anchors may consist of concrete anchors, anchor piles or a pile anchor which are located a sufficient distance behind the wall to develop lateral

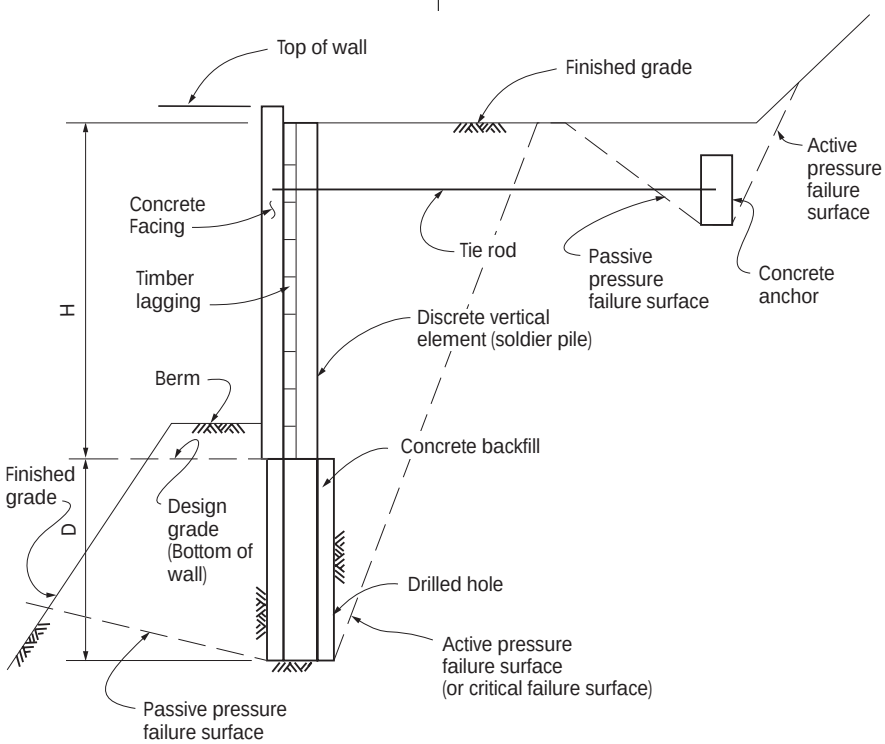


a) Wall With Concrete Anchor

**Figure 5.8.1-1 Terms used in the Design of Anchored Retaining Walls using Tie Rods and Structural Anchors (Continued)**

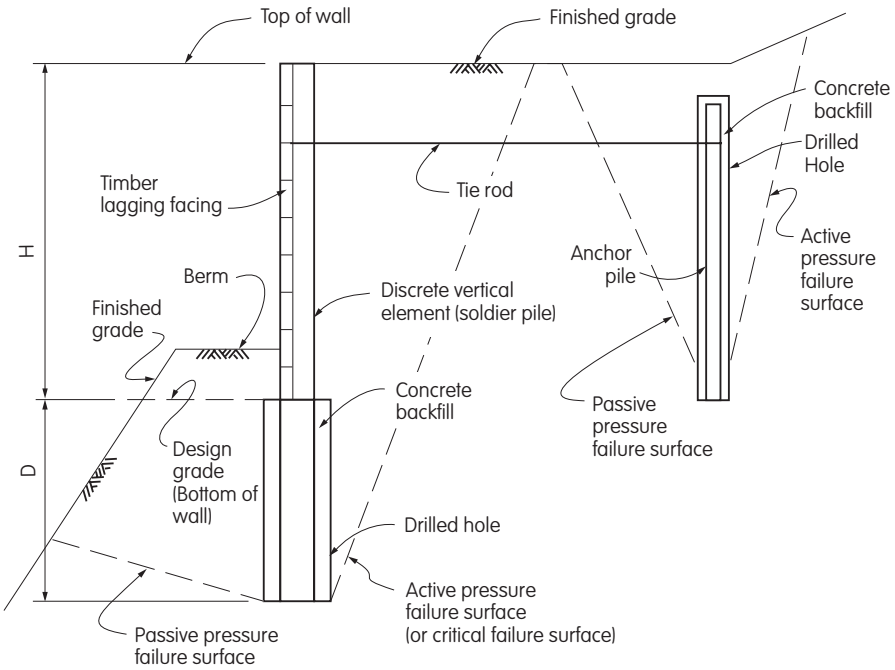


b) Wall With Anchor Pile

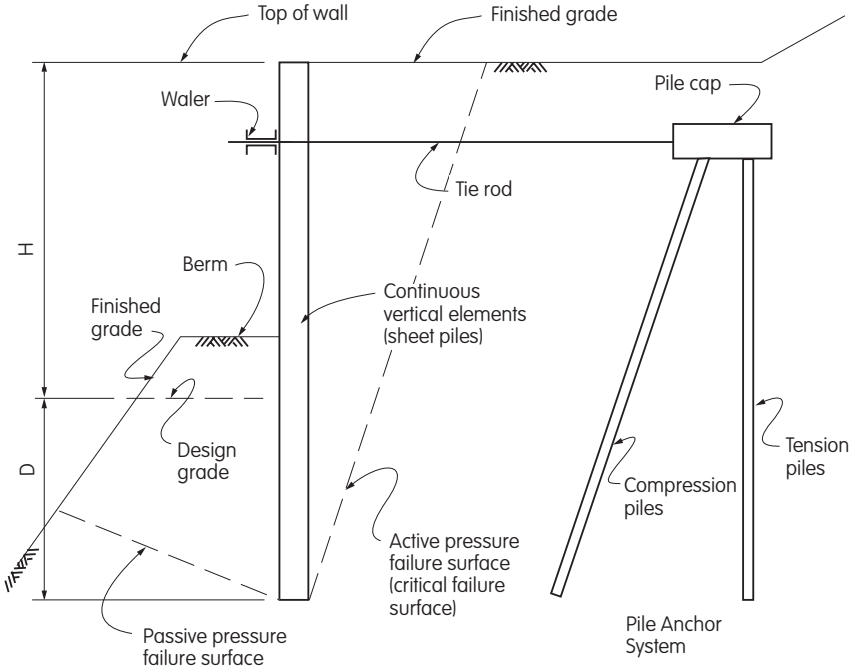


c) Wall With Pile Anchor System

**Figure 5.8.1-1 Terms used in the Design of Anchored Retaining Walls using Tie Rods and Structural Anchors (Continued)**

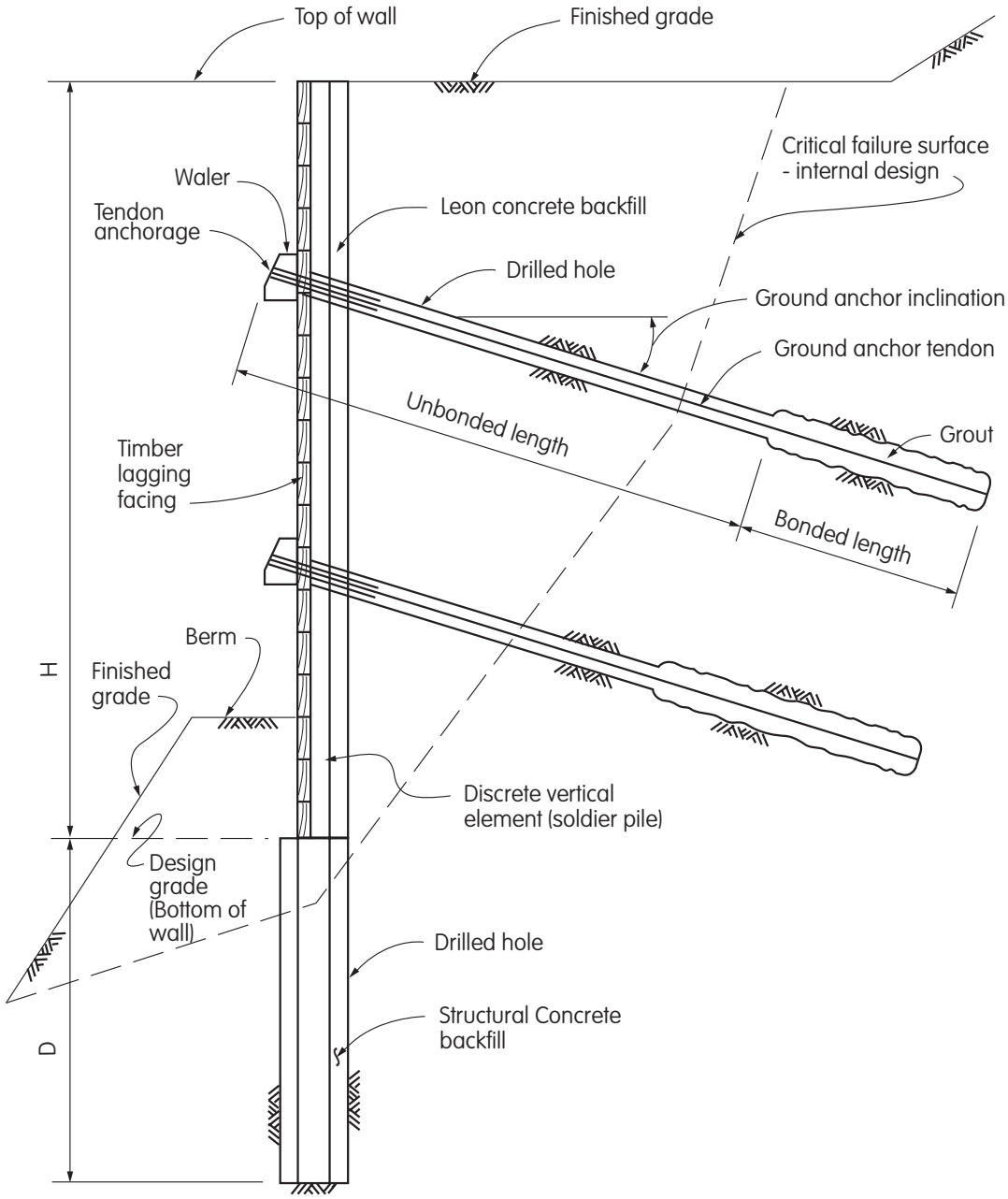


a) Wall With Multiple Levels of Ground Anchors and Discrete Vertical Elements

**Figure 5.8.1-2 Terms used in the Design of Anchored Retaining Walls using Ground Anchors ( Tiebacks) ( Continued )**

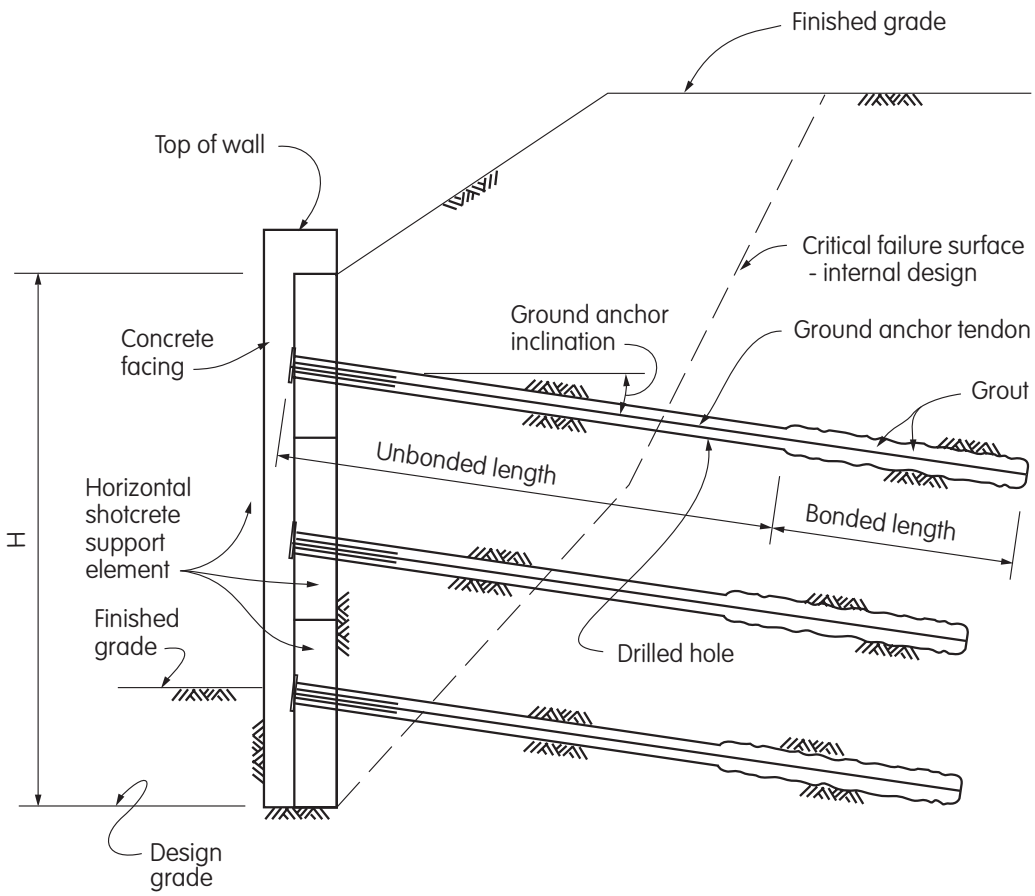


b) Wall With Multiple Levels of Ground Anchors and Continuous Horizontal Support Elements (soldier pileless wall)

**Figure 5.8.1-2 Terms used in the Design of Anchored Retaining Walls using Ground Anchors ( Tiebacks) ( Continued )**

resistance beyond any critical failure surface and tie rods secured to the wall and structural anchor. Ground anchors generally consist of prestressing steel elements (tendons) placed and grouted in drilled holes.These tendons extend from an anchorage to the wall to an anchor zone (bonded length) located beyond any critical failure surface behind the wall. The ground anchor includes an unbonded length which permits stressing the anchor without transferring forces to the ground within this length and a bonded length overwhich tendon forces are transferred to the ground.

### 5.8.2 Loading

#### 5.8.2.1 Walls with Structural Anchors

For the determination of active lateral earth pressure distributions and additional loadings, the provisions of Article 5.7.2 apply.

The effects of wall movements on adjacent facilities shall be considered in the selection of the design lateral earth pressures. Walls that can tolerate little or no movement should be designed for at-rest lateral earth pressure.

#### 5.8.2.2 Walls with Ground Anchors

For the determination of the apparent lateral earth pressure distributions acting on the wall height, $H$, the provisions of Article 5.5.5.7 apply. For the determination of the active lateral earth pressure distributions acting on the wall embedment depth, $D$, the provisions of Article 5.5.5.6 apply. When determining the value for, $K_a$, for granular soils, the Coulomb theory should be used with the value for the wall friction angle, $\delta$, equal to zero. The lateral pressure due to traffic, permanent point and line surcharge loads, backfill compaction or other types of surcharge loads shall be added to the above lateral earth pressures. Refer to Article 5.5.5.10 for the determination of design lateral earth pressures due to surcharge loads.

### 5.8.3 Wall Movement

The effects of horizontal and vertical wall movements on the performance of the wall and on adjacent facilities shall be considered in the development of the wall design.

### 5.8.4 Water Pressure and Drainage

The provisions of Article 5.7.4 shall apply.

### 5.8.5 Passive Resistance

The passive lateral earth pressure distributions, provided in Article 5.5.5.6, may be used in the determination of the required embedment of the vertical wall elements. When determining the value for, $k_p$, for granular soils, the provisions of Articles, 5.5.5.4 and 5.5.5.5 may be used. The vertical component of the total passive lateral earth pressure should not exceed the available vertical force resistance of the wall and the wall anchors.

In determining the required embedment depth to mobilize passive lateral resistance, consideration shall be given to planes of weakness (e.g. slickensides, bedding planes, and joint sets) that could reduce the strength of the soil or rock determined by field or laboratory tests. Embedment in intact rock including massive to appreciably jointed rock which should not fail through a joint surface, shall be based on the shear strength, $s_m$, of the rock mass.

#### 5.8.6.1 General

The design of anchored walls includes the determination of the following;

- Size, spacing, and depth of embedment of the vertical wall elements and facing;
- Type, capacity, spacing, depth, inclination and corrosion protection of wall anchors; and
- Structural capacity and stability of the wall, wall foundation and surrounding soil mass for all intermediate and final stages of construction.

For anchored walls with embedment in soil, the design height, $H$, shall be established so that the finished grade provides a berm in front of the wall face at least $4$ feet wide measured from the face of the wall and which provides a design grade at least $2$ feet below finished grade measured at the face of the wall. For walls supported in or through soft clays, the design grade shall be established sufficiently below finished grade to prevent heave in front of the wall.

For anchored walls with embedment in rock the design height, $H$, shall be established so that stable conditions will be provided considering the nature of the rock and slope in front of the wall and the service life of the wall.

Bearing resistance shall be determined assuming that all vertical components of loads are transferred to the embedded portion of the vertical wall elements. The provisions of Articles 4.4.7, 4.4.8, 4.5.6 and 4.6.5 shall apply.

Where fill is placed behind a wall, either around or above the tie rods or ground anchors, special designs, and construction specifications shall be provided to prevent damage to these elements due to the backfilling operations or due to settlement of subsoil.

For walls in cut where the excavation has advanced to the level required for the construction of the top level of anchors, but prior to the installation of the anchors, the wall shall be analyzed as a temporary non-gravity cantilevered wall and the provisions of Article 5.7 shall apply.

For anchors that are to be load tested against the wall, consideration of the ability of the retained soil to resist the anchor test load without excessive deflection of the wall shall be considered in locating the top level of anchors and in establishing the design force, $T$, of the anchors.

Anchored walls must be internally and externally stable. Internal stability requires the wall anchors to be located sufficiently behind the wall so that the anchors do not develop load-resistance from the soil mass retained by the wall unless the load-resistance is reduced by the amount developed from the retained soil mass. A wall is internally stable when any failure surface that passes between the wall and the wall anchor will have an adequate factor of safety with the available anchor resistance applied. External stability is satisfied when any failure surface that passes behind the wall anchors has an adequate factor of safety. The factors of safety in Article 5.2.2.3 apply.

### 5.8.6.2 Walls with Structural Anchors.

Anchored walls with structural anchors shall be dimensioned to ensure stability against passive failure of the embedded vertical elements such that the factor of safety against rotation about the level of the tie rod is greater than or equal to $1.5$, $FS_R \geq 1.5$, and to ensure that the ultimate capacity, $T_{ult}$, is greater than or equal to, $2T$, $T_{ult} \geq 2T$.

For design of these walls, refer to Figures 5.8.6.2-1, 5.8.6.2-2, and 5.8.6.2-3 and the following procedures;

1. Determine the active lateral earth pressure distribution or at-rest lateral earth pressure distribution if movements are to be restricted and any additional loadings. Determine the passive lateral earth pressure distribution;
2. Determine the embedment, $D_o$, of the vertical wall elements that provides a factor of safety equal to $1.0$ against rotation about point, $O$, (level of tie rod);
3. Determine the tie rod force, $T_o$, that provides equilibrium of horizontal forces acting on the wall over the height, $H + D_o$;
4. Determine the tie rod design force, $T$. For walls with concrete anchors and anchor piles, $T \geq 1.2\ T_o$, for walls with pile anchors, $T \geq 1.4\ T_o$.
5. Design tie rod, tie rod connections, and anchor for the design force, $T$. the anchor shall be designed so that, $T_{ult}$ , of the anchor is greater than or equal to $2$ times the design force, $T$, of the tie rod.
6. For walls with a concrete anchor or anchor piles, if the passive wedge failure surface of the anchor encroaches into the active wedge failure surface behind the wall, determine the force, $\Delta P_p$, required for equilibrium of the soil mass, abed, between the anchor and the wall.
7. Determine the embedment, $D$, for the vertical wall elements that provides a factor of safety equal to $1.5$ against rotation about point, $O$, (level of tie rod). Include the driving force, $\Delta P_p$, in the determination of , $D$.
8. Design the vertical wall elements assuming a point of zero moment in the vertical wall elements at point, $b$.

When the tie rods are not horizontal, the vertical component of the tie rod design force, $T$, shall be considered in the design of the vertical wall elements, tie rod connections, and anchors.

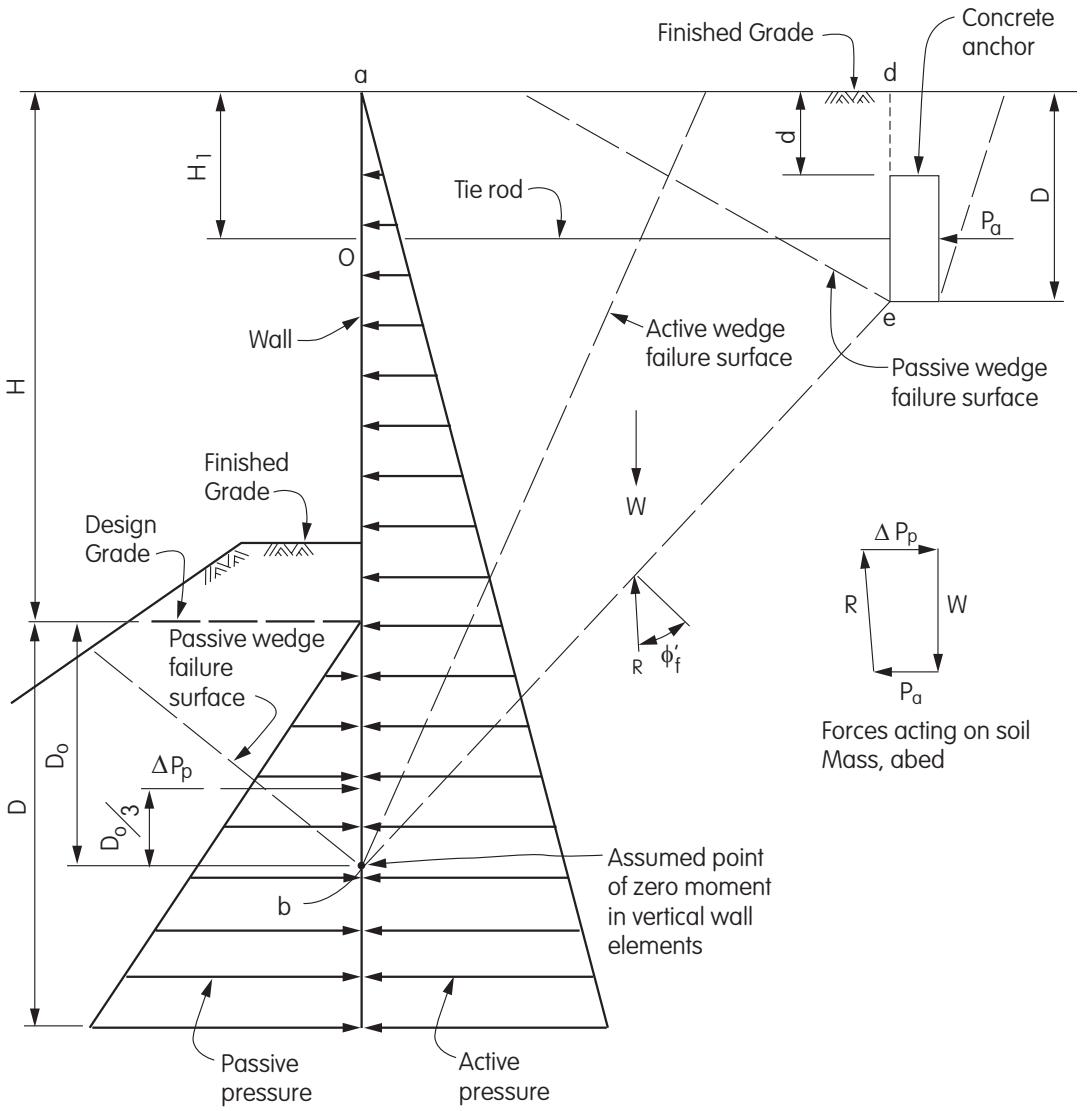


**Figure 5.8.6.2-1 Anchored Wall with Concrete Anchor**

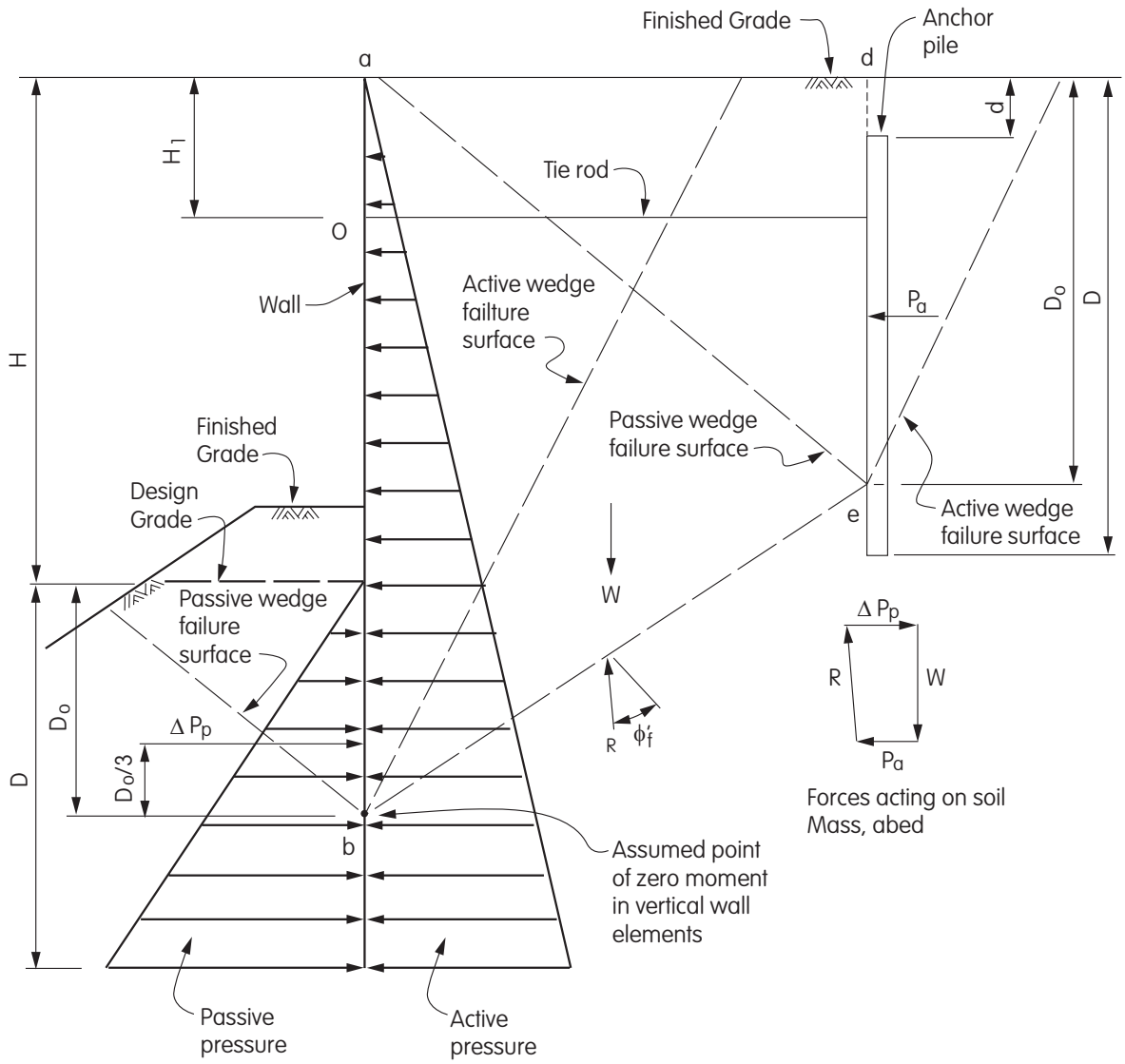


**Figure 5.8.6.2-2 Anchored Wall with Anchor Piles**

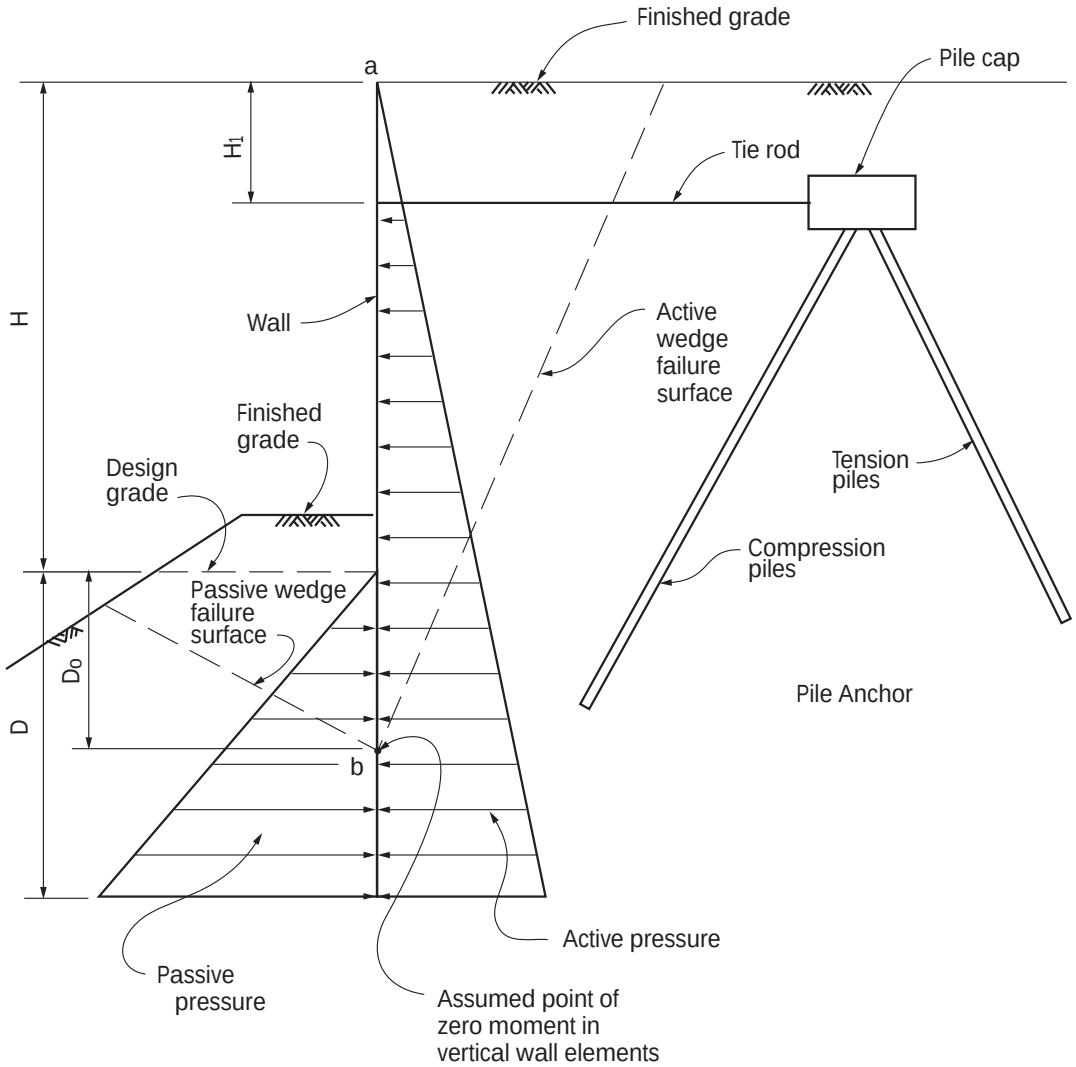


**Figure 5.8.6.2-3 Anchored Wall with Pile Anchor**

If the wall will support soil or backfill before the anchor is effective, the wall shall be checked as a non-gravity cantilevered wall, see Article 5.7.

#### *5.8.6.2.1 Concrete Anchors*

The ultimate capacity, $T_{ult}$, of a concrete anchor equals the total passive lateral earth pressure resistance minus the total active lateral earth pressure minus any lateral earth pressure due to surcharge loads acting behind the anchor, see Figure 5.8.6.2.1-1. If, $d \leq \frac{D}{2}$, it may be assumed that the anchor extends to the finished grade and the ultimate capacity of the anchor is,

$$T_{ult} = (P_p - P_a)\, b' \qquad (5.8.6.2\text{-}1)$$

where:

$T_{ult}$ = ultimate capacity of the concrete anchor (KIP)

$P_p$ = total lateral passive earth pressure acting on height, $D$, per foot width of anchor (K/FT)

$P_a$ = total lateral active earth pressure acting on height, $D$, per foot width of anchor (K/FT)

$h$ = actual height of concrete anchor (FT)

$b$ = actual width of concrete anchor (FT)

$s$ = horizontal spacing of tie rods (FT)

$d$ = depth of concrete anchor cover (FT)

$D$ = depth of embedment of concrete anchor (FT)

$b'$ = effective width of concrete anchor (FT)

where :

$b'$ = $s$ for continuous anchors and

$b'$ = $b + \frac{h}{2}$ or $b + \frac{b}{2}$, whichever is least but not to exceed, $s$, for individual anchors

If, $d > \frac{D}{2}$ the ultimate capacity, $T_{ult}$, of a concrete anchor may conservatively be taken as the total lateral passive earth pressure acting on the anchor height, $h$, and effective width, $b'$, minus the total lateral active earth pressure and any lateral earth pressure due to surcharge loads acting behind the anchor acting on the anchor height, $h$, and effective with, b'. Alternatively, $T_{ult}$, may be determined from representative full size tests or model tests.

For the determination of the active lateral earth pressure, $P_a$, and the lateral earth pressures due to surcharge loads, the provisions of Article 5.7.2 apply.

The passive lateral earth pressure distributions provided in Article 5.5.5.6 may be used for determining, $P_p$. When determining the value for, $k_p$, for granular soils, the provisions of Article 5.5.5.4 and 5.5.5.5 may be used with the value for the wall friction angle, $\delta$, assumed equal to zero.

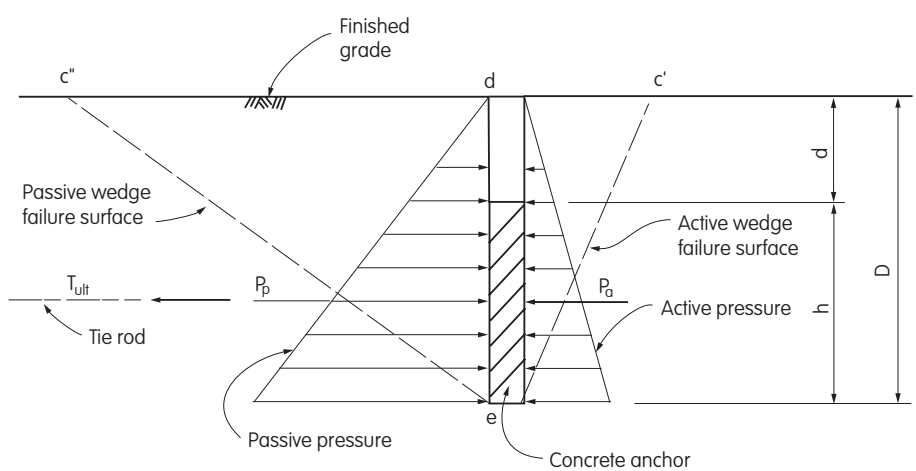


**Figure 5.8.6.2.1-1 Determination of Ultimate Capacity of a Concrete Anchor**

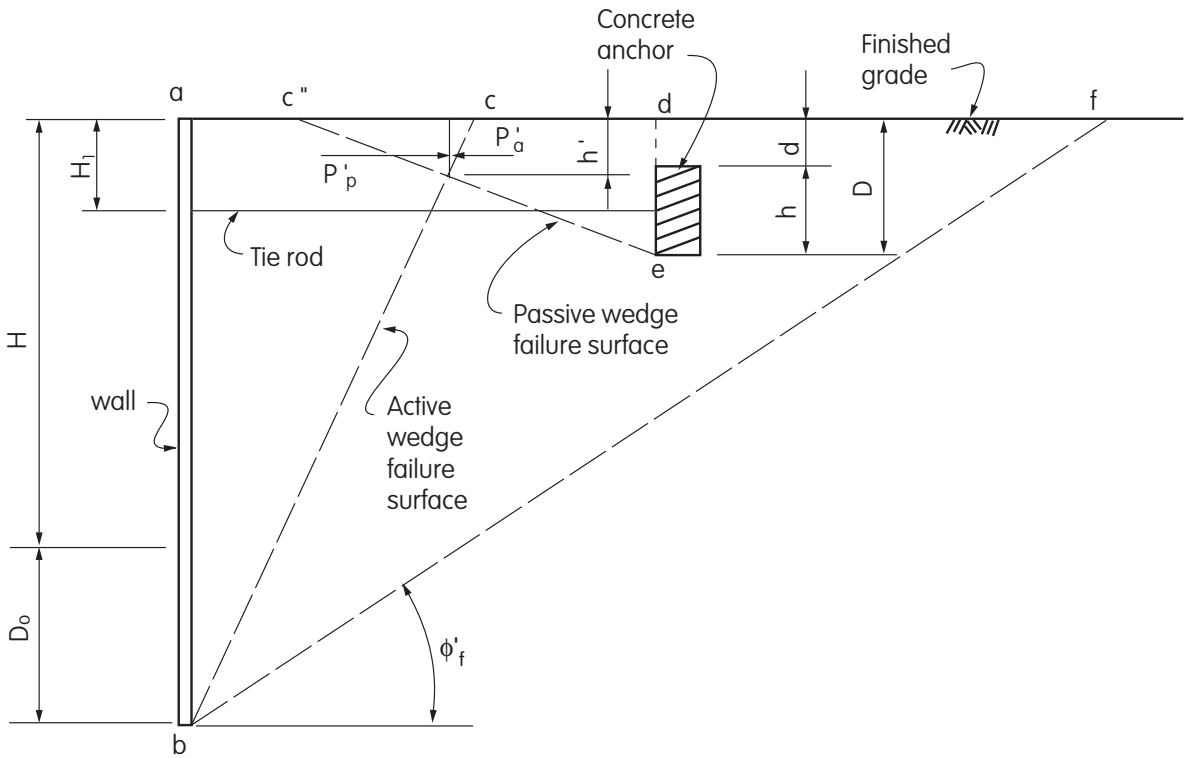


**Figure 5.8.6.2.1-2 Determination of Reduction of Ultimate Capacity of a Concrete Anchor**

The ultimate capacity, $T_{ult}$, of a concrete anchor should be reduced when the passive wedge failure surface in front of the anchor crosses the active wedge failure surface behind the wall, see Figure 5.8.6.2.1-2. If the anchor is located between surfaces, bc, and, bf, in Figure 5.8.6.2.1-2, only partial resistance is available. The capacity reduction, $\Delta T_{ult}$, may be determined as;

$$\Delta T_{ult} = (P'_p - P'_a)\, b'$$

where:

$\Delta T_{ult}$ = ultimate capacity reduction for the concrete anchor (KIP)

$P'_p$ = total lateral passive earth pressure acting on height, $h'$, per foot width of anchor (K/FT)

$P'_a$ = total lateral active earth pressure acting on height, $h'$, per foot width of anchor (K/FT)

$h'$ = height from intersection of failure surfaces to ground surface (finished grade) (FT)

$b'$ = effective width of concrete anchor (FT)

The tie rod connection to the anchor should be located at the location of the resultant lateral earth pressures acting on the vertical faces of the anchor.

### *5.8.6.2.2 Anchor Pile*

The ultimate capacity, $T_{ult}$, of an anchor pile is a function of the moment resistance of the total passive lateral earth pressure minus the driving moment of the total active lateral earth pressure and any lateral earth pressure due to surcharge loads acting on the anchor pile embedment, $D_o$, and anchor pile effective width, $b'$, see Figure 5.8.6.2.2-1. If, $d \leq b'$, it may be assumed that the anchor pile extends to the finished grade and that the ultimate capacity of the anchor pile is;

$$T_{ult} = \frac{(P_p y_p - P_a y_a)}{(D_o - H_1)} \qquad (5.8.6.2.2\text{-}1)$$

where :

$T_{ult}$ = ultimate capcity of the anchor pile (KIP)

$P_p$ = total lateral passive earth pressure acting on height, $D_o$, and effective anchor pile width, $b'$ (KIP)

$P_a$ = total lateral active earth pressure acting on height, $D_o$, and effective anchor pile width, $b'$ (KIP)

$y_p$ = vertical distance from the bottom of embedment, $D_o$, to the level at which, $P_p$, acts (FT)

$y_a$ = vertical distance from the bottom of embedment, $D_o$, to the level at which, $P_a$, acts (FT)

$D_o$ = calculated embedment from finished grade of anchor pile (FT)

$d$ = distance from finished grade to top of anchor pile (FT)

$H_1$ = distance from finished grade to level at which, $T_{ult}$, acts on anchor pile (FT)

$b'$ = effective width of anchor pile (FT)

$D$ = embedment from finished grade to be used for anchor pile (FT)

$F$ = total force acting on anchor pile at depth, $D_o$, required to provide equilibrium of horizontal forces acting on the anchor pile (KIP)

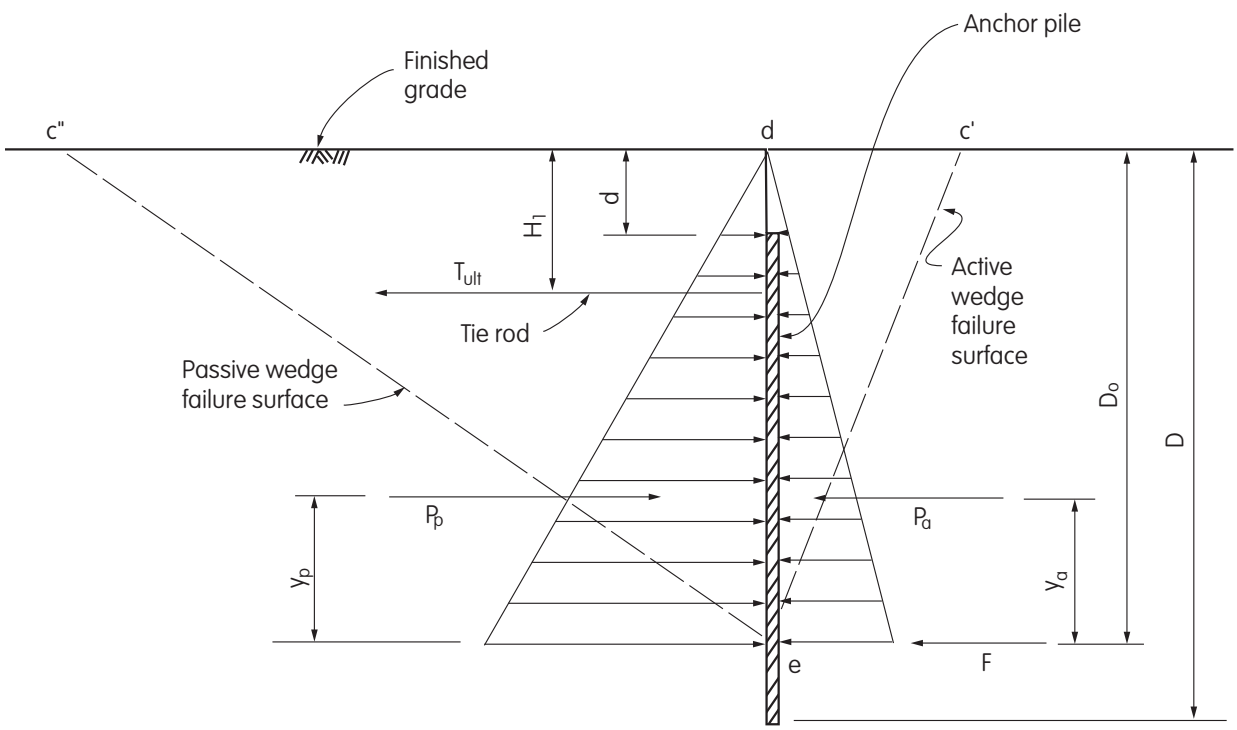


**Figure 5.8.6.2.2-1 Determination of Ultimate Capacity of an Anchor Pile**

The passive lateral earth pressure distributions provided in Article 5.5.5.6 may be used for determining, $P_p$. When determining the value for, $k_p$, for granular soils, the provisions of Article 5.5.5.4 and 5.5.5.5 may be used with the value for the wall friction angle, $\delta$, assumed equal to zero.

For the determination of the active lateral earth pressure, $P_a$, and the lateral earth pressures due to surcharge loads, the provisions of Article 5.7.2 apply. When determining the active lateral earth pressure, the value for the wall friction angle, $\delta$, shall be assumed equal to zero.

When determining the effective width, $b'$, of an anchor pile, the provisions of Article 5.7.6 apply.

For anchor piles embedded in soil, the calculated embedment, $D_o$, shall be increased to determine the embedment to be used, $D$, so that $D \geq 1.2\ D_o$. For anchor piles embedded in rock, the calculated embedment, $D_o$, shall be increased to determine the embedment to be used, $D$, so that $D \geq 1.1\ D_o$.

The ultimate capacity, $T_{ult}$, of an anchor pile should be reduced when the passive wedge failure surface in front of the anchor pile crosses the active wedge failure surface behind the wall. Where this case occurs, the ultimate capacity, $T_{ult}$, may be determined by considering a reduced value for, $P_p$, acting on the anchor pile. The reduction in, $P_p$, is;

$$\Delta P_p = (P'_p - P'_a)\ b' \qquad (5.8.6.2.2\text{-}2)$$

where:

$\Delta P_p$ = reduction in lateral passive earth pressure acting on the anchor pile (KIP)

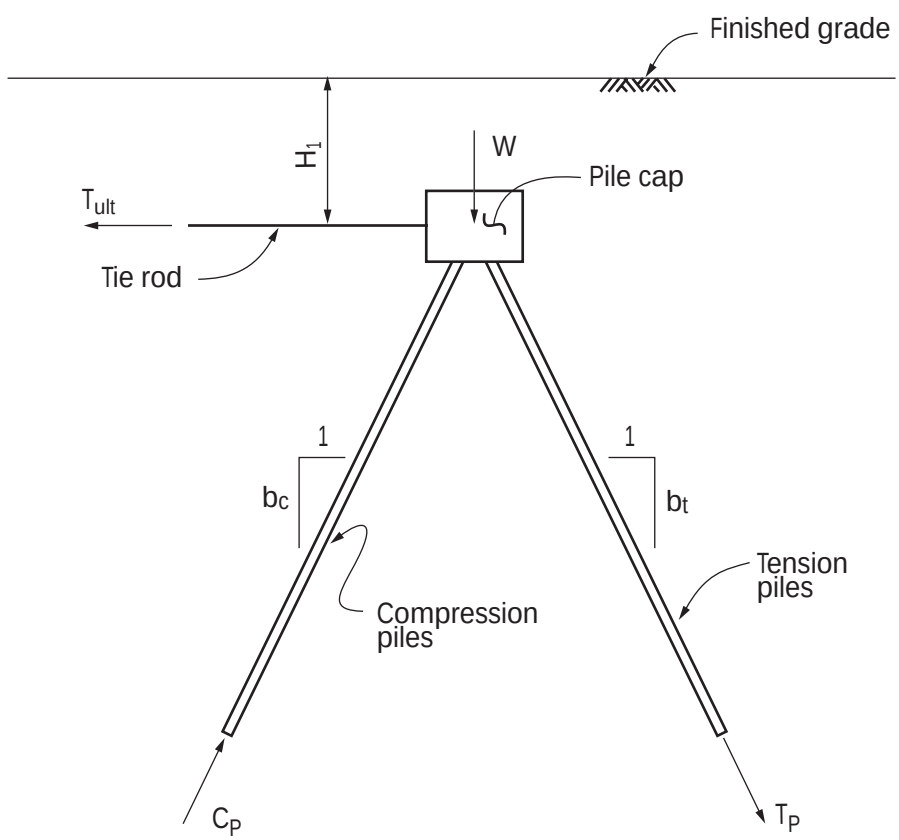


**Figure 5.8.6.2.3-1 Determination of Ultimate Capacity of a Pile Anchor**

$P'_p$ = total lateral passive earth pressure acting on height, $h'$, per foot width of anchor pile (K/FT)

$P'_a$ = total lateral active pressure acting on height, $h'$, per foot width of anchor pile (K/FT)

$h'$ = height from intersection of failure surfaces to ground surface (finished grade) (FT)

$b'$ = effective width of anchor pile (FT)

*5.8.6.2.3 Pile Anchor*

Pile anchors generally consist of driven tension and compression piles and a pile cap for anchoring the tops of the piles and the end of the horizontal tie rod, see Figure 5.8.6.2.3-1. The ultimate capacity, $T_{ult}$, of a pile anchor is a function of the horizontal component of force in the tension and compression piles. The ultimate capacity of a continuous pile anchor is;

$$T_{ult} = s\left(\frac{C_{ph}}{s_c} + \frac{T_{ph}}{s_t}\right) \qquad (5.8.6.2.3.1)$$

and the ultimate capacity of an individual pile anchor is;

$$T_{ult} = \sum C_{ph} + \sum T_{ph} \qquad (5.8.6.2.3.2)$$

where:

$T_{ult}$ = ultimate capacity of a continuous pile anchor with tie rods at spacing, $s$ (KIP) or ultimate capacity of an individual pile anchor (KIP)

$C_{ph}$ = horizontal component of axial force in a battered compression pile (KIP)

$T_{ph}$ = horizontal component of axial force in a battered tension pile (KIP)

$s$ = spacing of tie rods (FT)

$s_c$ = spacing of compression piles (FT)

$s_t$ = spacing of tension piles (FT)

$H_1$ = distance from finished grade to level at which, $T_{ult}$, acts on pile anchor (FT)

$W$ = weight of pile cap and pile cap cover (KIP/FT)

$b_c$ = indicator of batter of compression piles (DIM)

$b_t$ = indicator of batter of tension piles (DIM)

$C_p$ = axial force in compression pile (KIP)

$T_p$ = axial force in tension pile (KIP)

For the design of the driven piles, the provisions of Article 4.5 shall apply except that piles may be designed for sustained tension force. The axial forces, $C_p$, and, $T_p$, shall be less than or equal to the nominal resistances of the piles. Lateral earth pressures acting on the piles and pile cap generally are not considered in determining, $T_{ult}$.

The pile anchor should be located beyond any critical failure surface behind the wall.

## 5.8.6.3 Walls with Ground Anchors

Anchored walls with ground anchors shall be dimensioned to ensure that the total lateral load, $P_{Total}$, plus any additional horizontal loads are resisted by the horizontal component of the anchor design force, $T$, of all the anchors and the reaction, $R$, at or below the bottom of the wall. The embedded vertical elements shall ensure stability against passive failure such that the factor of safety against translation is greater than or equal to $1.5$, $FS_t \geq 1.5$. In determining the stability of the embedded vertical elements, only the passive resistance below the critical failure surface or point, o, in Figures 5.8.6.3-1 thru 5.8.6.3-5 whichever is lowest, shall be considered in resisting the reaction, $R$, and the active lateral earth pressure below the critical failure surface or point, $o$, in Figures 5.8.6.3-1 thru 5.8.6.3-5 whichever is lowest.

When the critical failure surface of the limiting equilibrium analysis associated with the determination of, $P_{Total}$, in Aticle 5.5.5.7 passes a significant distance below the design grade at the bottom of the wall, then the ground anchors should be designed to resist the total

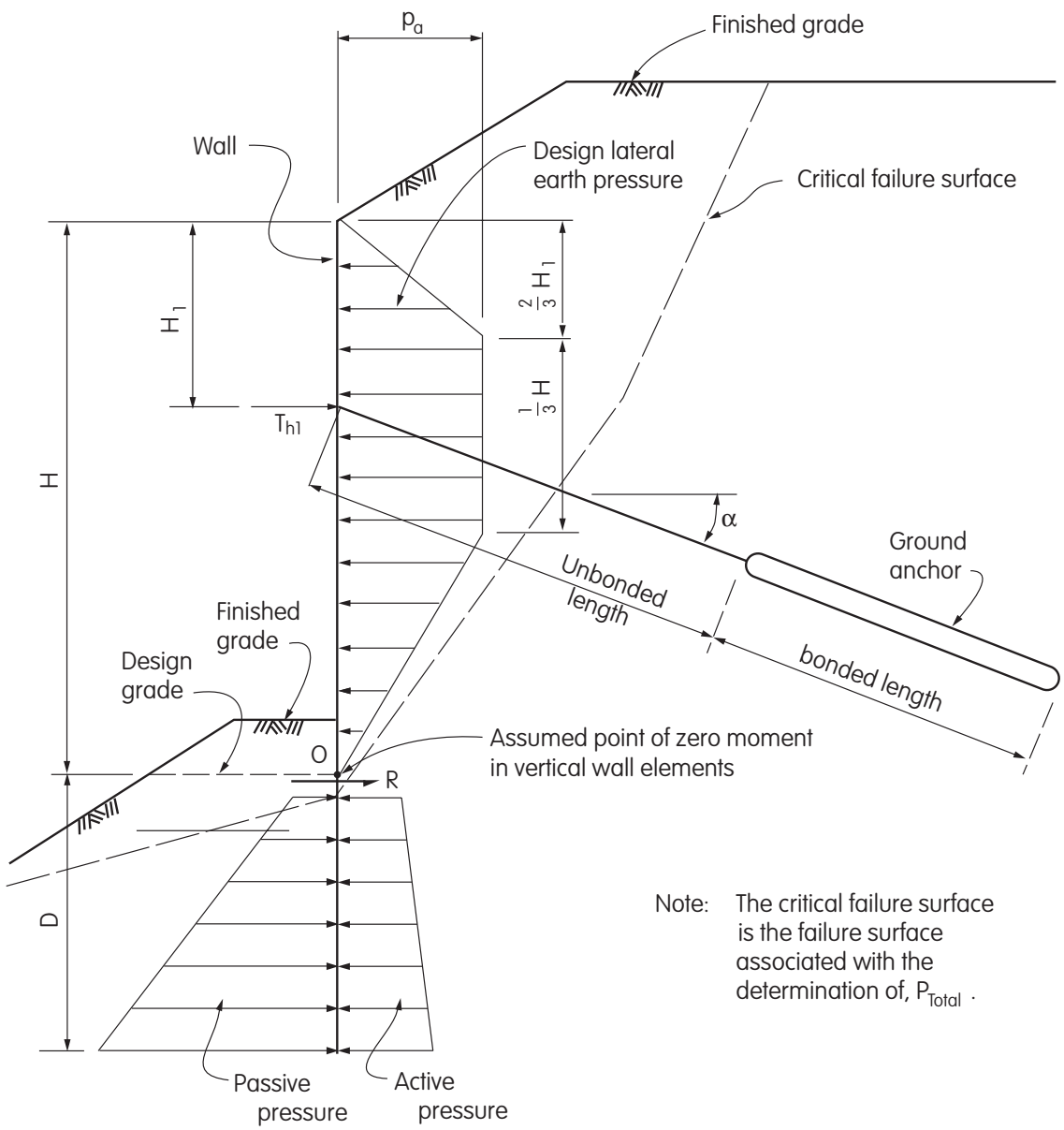


**Figure 5.8.6.3-1 Anchored Wall with Single Level of Ground Anchors, Critical Failure Surface Near Bottom of Wall, and**

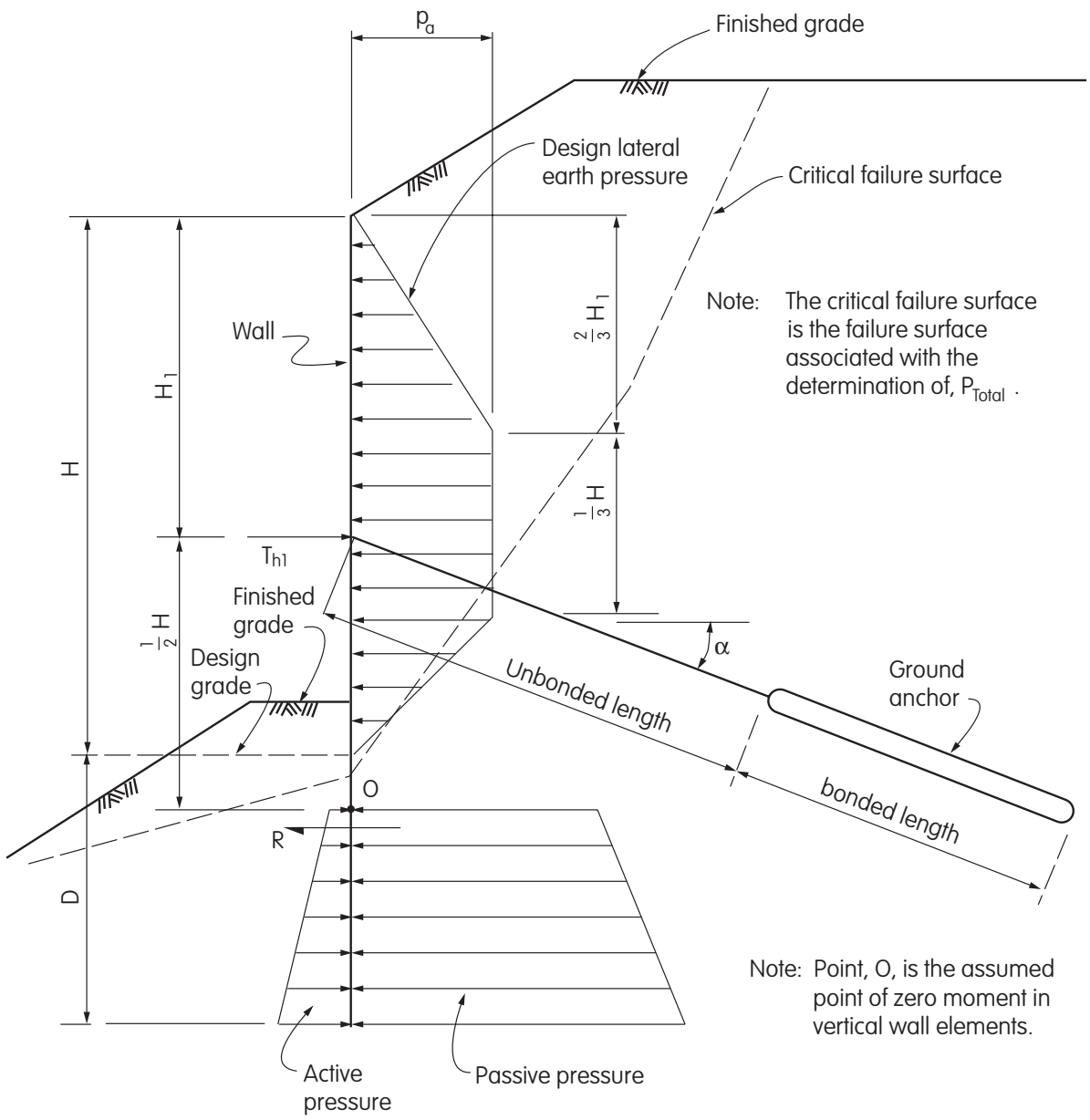


**Figure 5.8.6.3-2 Anchored Wall with Single Level of Ground Anchors, Critical Failure Surface Near Bottom of Wall, and** $\frac{H}{2} < H_1, \leq \frac{2}{3}H$

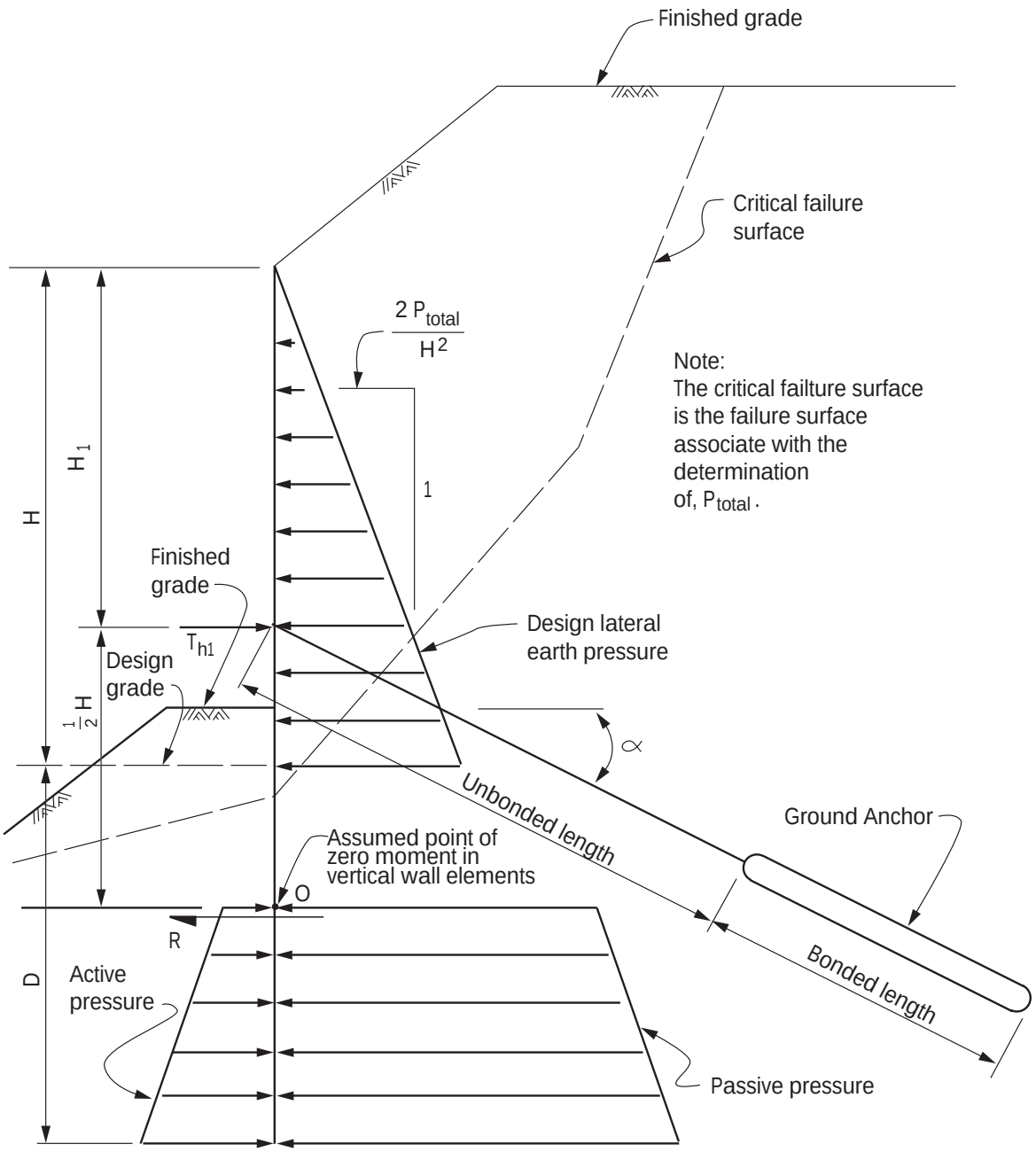


**Figure 5.8.6.3-3 Anchored Wall with Single Level of Ground Anchors, Critical Failure Surface Near Bottom of Wall, and** $H_1 \geq \frac{2}{3}H$

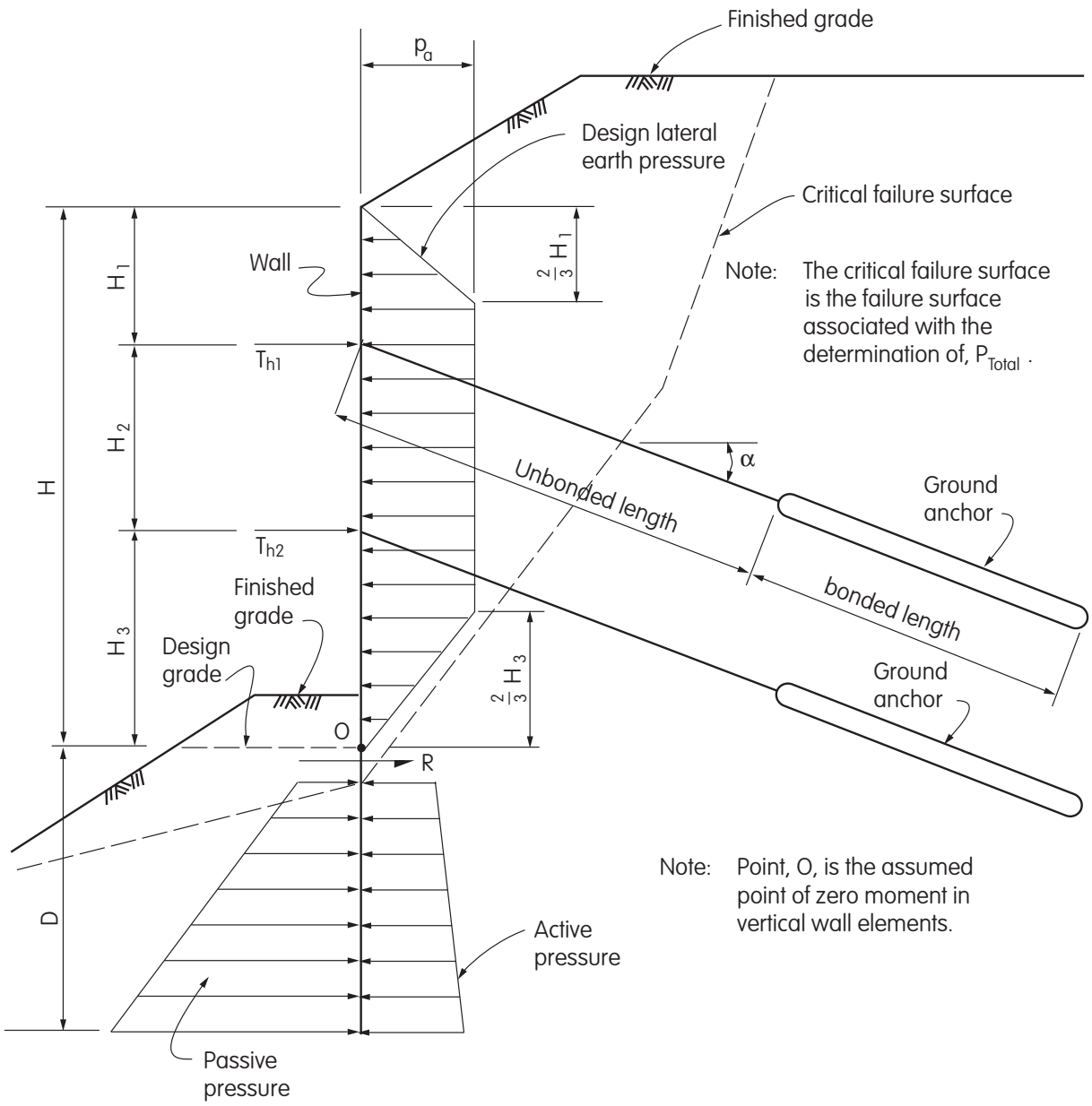


**Figure 5.8.6.3-4 Anchored Wall with Multiple Levels of Ground Anchors and Critical Failure Surface Near Bottom of Wall**

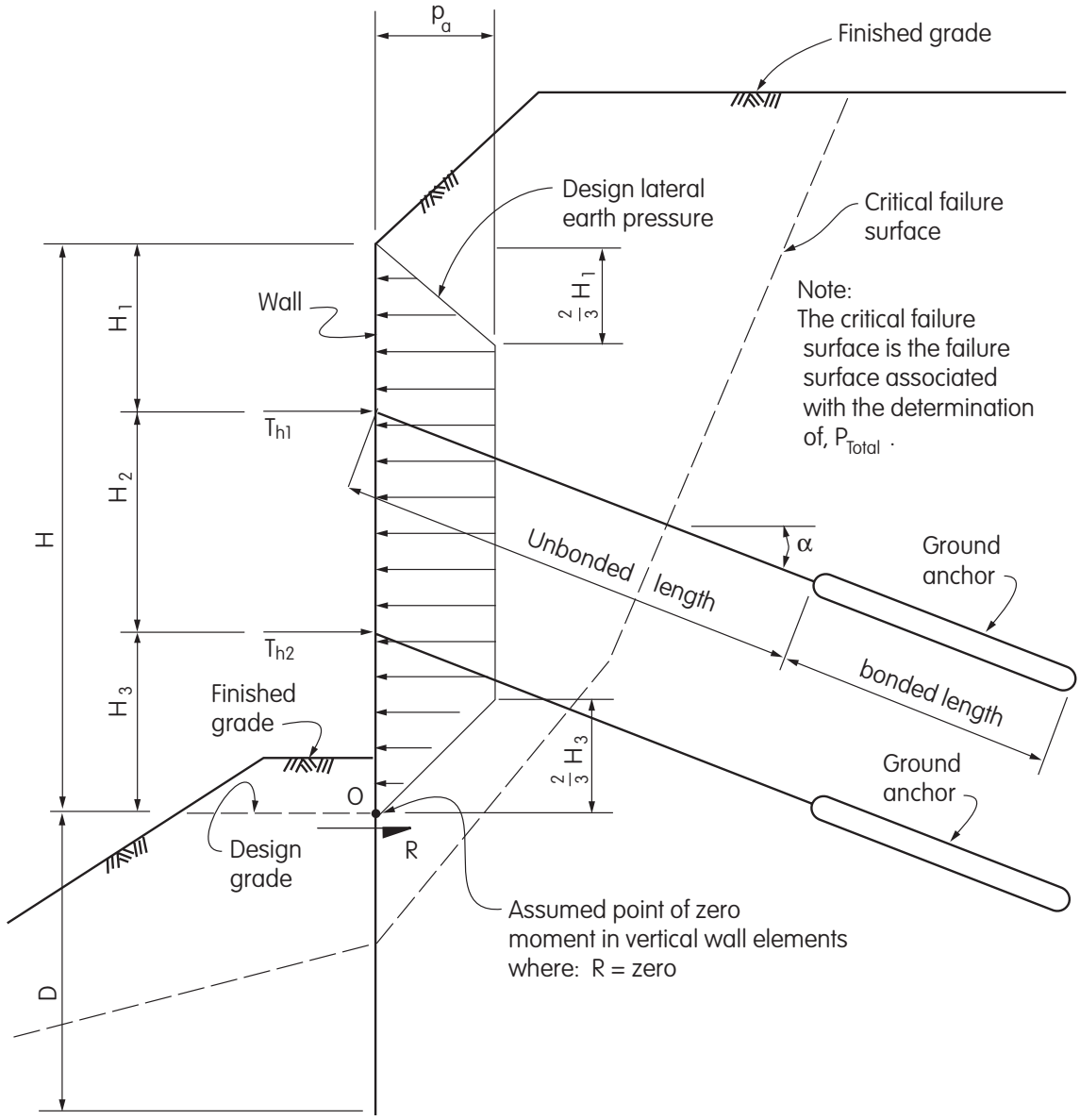


**Figure 5.8.6.3-5 Anchored Wall with Multiple Levels of Ground Anchors and Critical Failure Surface a Significant Distance Below the Bottom of Wall**

force, $P_{Total}$, and the vertical elements of the wall should be designed as a cantilever from the lowest anchor level to the bottom of the wall.

For design of these walls, refer to Figures 5.8.6.3-1 thru 5.8.6.3-3 for walls with a single level of anchors and Figures 5.8.6.3-4 and 5.8.6.3-5 for walls with multiple levels of anchors and the following procedures;

1. Determine the design lateral earth pressure and any additional horizontal loading acting on the wall over the design height, ***H***;

2. Determine the passive and active lateral earth pressures acting on the embedded vertical wall elements below the point, ***O***, or the critical failure surface whichever is the lowest;

3. Determine the horizontal component of ground anchor design force, $T_h$, and reaction, ***R***, that provides equilibrium of horizontal forces above point, ***O***. For walls with a single level of anchors, take moments about point, ***O***, to determine, $T_{h1}$, where for walls with, $H_1$, less than or equal to, $\frac{H}{2}$, point, ***O***, is located at the bottom of wall (design grade) and where for walls with, $H_1$, greater than, $\frac{H}{2}$, point, ***O***, is located, $\frac{H}{2}$, below the level of the anchors. For walls with multiple levels of anchors a number of suitable methods for the determination of, $T_h$, at each level are in common use. Sabatini, et. al. (1999) provides two methods which can be used : the Tributary Area Method, and the Hinge Method. To determine, ***R***, equate horizontal forces above point, ***O***, equal to zero;

4. Determine the design force, ***T***, for the anchors at each level, where, $T = \frac{T_h}{\cos\alpha}$, and ,$\alpha$, equals the inclination from horizontal of the anchor;

5. Determine the embedment, ***D***, of the vertical wall elements required to ensure stability against passive failure;

6. Determine the embedment, ***D***, of the vertical wall elements required to resist all vertical components of loads. Only the portion of the vertical wall elements below the critical failure surface should be considered in determining the resistance to vertical loads;

7. Use the greater of the two embedments, ***D***, in procedures ***5*** and ***6*** above;

8. Design the vertical wall elements for all horizontal and vertical loads. Horizontal supports may be assumed at each level of ground anchors and at point, ***O***;

9. Design the ground anchors.

Ground anchors shall be designed to resist pullout of the bonded length in soil or rock. The allowable pullout resistance of a straight shaft anchor in soil or rock, $Q_a$, is computed as;

$$Q_a = \frac{\pi d \tau_a L_b}{FS}$$

where :

$Q_a$ = allowable anchor pullout resistance (KIP)
$d$ = diameter of anchor drill hole (FT)
$\tau_a$ = ultimate anchor bond stress (KSF)
$L_b$ = anchor bond length (FT)
$FS$ = factor of safety applied to ultimate anchor bond stress (DIM)

For preliminary design the resistance of anchors may either be based on the results of anchor pullout load tests; estimated based on a review of geologic and boring data, soil and rock samples, laboratory testing, and previous experience; or estimated using published ultimate soil and rock to grout bond stresses. Typical values for the factor of safety, ***FS***, applied to ultimate anchor bond stress values are ***2.0*** to ***2.5*** for soil and ***2.5*** to ***3.0*** for rock. Final design of the bonded length is generally the responsibility of the contractor and is verified by load testing each ground anchor.

The anchor bonded length shall be located beyond the critical failure surface in the retained soil mass.

A minimum distance between the front of the bonded zone of the anchor and the critical failure surface behind the wall of ***5*** feet or $\frac{H}{5}$ is needed to ensure that no load from the bonded zone of the ground anchor is transferred to the retained soil mass by the grout column.

Determination of the anchor unbonded length, inclination from horizontal and overburden cover shall consider:

- the location of the critical failure surface in the retained soil mass behind the wall,
- the minimum length required to ensure minimal loss of anchor prestress due to long-term ground movement, but not less than ***15*** feet,
- the depth to adequate anchoring strata,
- the method of anchor installation and grouting,
- the seismic performance of the wall and anchors.

The minimum spacing between ground anchor bonded lengths should be the larger of three times the diameter of the bonded length, or ***5*** feet. If smaller spacings are required to develop the required anchor design force, consideration may be given to differing the anchor inclinations between alternating anchors.

## 5.8.7 Structure Design

Structural design of individual wall and anchor elements may be performed by service load or load factor design methods in conformance with Article 3.22. The provisions of Article 5.7.7 apply.

## 5.8.8 Traffic Barrier

The provisions of Article 5.7.8 apply

## 5.8.9 Overall Stability

The provisions of Article 5.7.9 apply. Failure surfaces both in front of and behind the wall anchors shall be evaluated.

## 5.8.10 Corrosion Protection

### 5.8.10.1 Tie Rods

Tie rods should be protected from corrosion by complete full-length encapsulation and electrical isolation from the wall and structural anchor at the connections to these members.

### 5.8.10.2 Ground Anchors

Ground anchors should be protected from corrosion by complete full-length encapsulation. Encapsulation continuity shall be maintained at transitions in type of encapsulation including at the wall anchorage.

### 5.8.10.3 Wall Members

The provisions of Article 5.7.10 apply,

## 5.8.11 Load Testing and Lock Off

### 5.8.11.1 Structural Anchors

Consideration should be given to load testing representative structural anchors when unusual conditions are encountered to verify the safety with respect to the tie rod design force.

Tie rods should be secured to the wall with a nominal force to help establish uniform loading of the tie rods and anchors.

### 5.8.11.2 Ground Anchors

All ground anchors for walls should be load tested with either a proof test, performance test or creep test. The maximum test load for an anchor should generally be ***1.5*** times the design force, ***T***, of the anchor.

Ground anchors for walls are generally locked off against the wall at a load equal to ***0.75*** times the design force, ***T***, of the anchor. Higher lock-off forces may be considered in order to minimize wall movements or to develop higher frictional forces between the wall elements and the retained soil mass.

Ground anchors with strand tendons should be locked -off at a force which produces a stress in the strand of at least $0.50 f_{pu}$ of the strand in order to ensure that the strand wedges at the tendon anchorage maintain a sufficient grip on the strand to preclude slippage. If this lock-off force can not be provided, alternative means of restraining the strand wedges should be provided.

## 5.9 MECHANICALLY STABILIZED EARTH WALL

MSE walls shall be designed for external stability of the wall system as well as internal stability of the reinforced soil mass behind the facing. MSE wall system design requires knowledge of short and long-term properties of the materials used as soil reinforcement as well as the soil mechanics which govern MSE wall behavior. Structural design of the wall facing may also be required.

The design provisions provided herein for MSE walls do not apply to geometrically complex MSE wall systems such as tiered walls (walls stacked on top of one another with various offset distances of the front face) or walls with varying soil reinforcement length over the height of the wall.

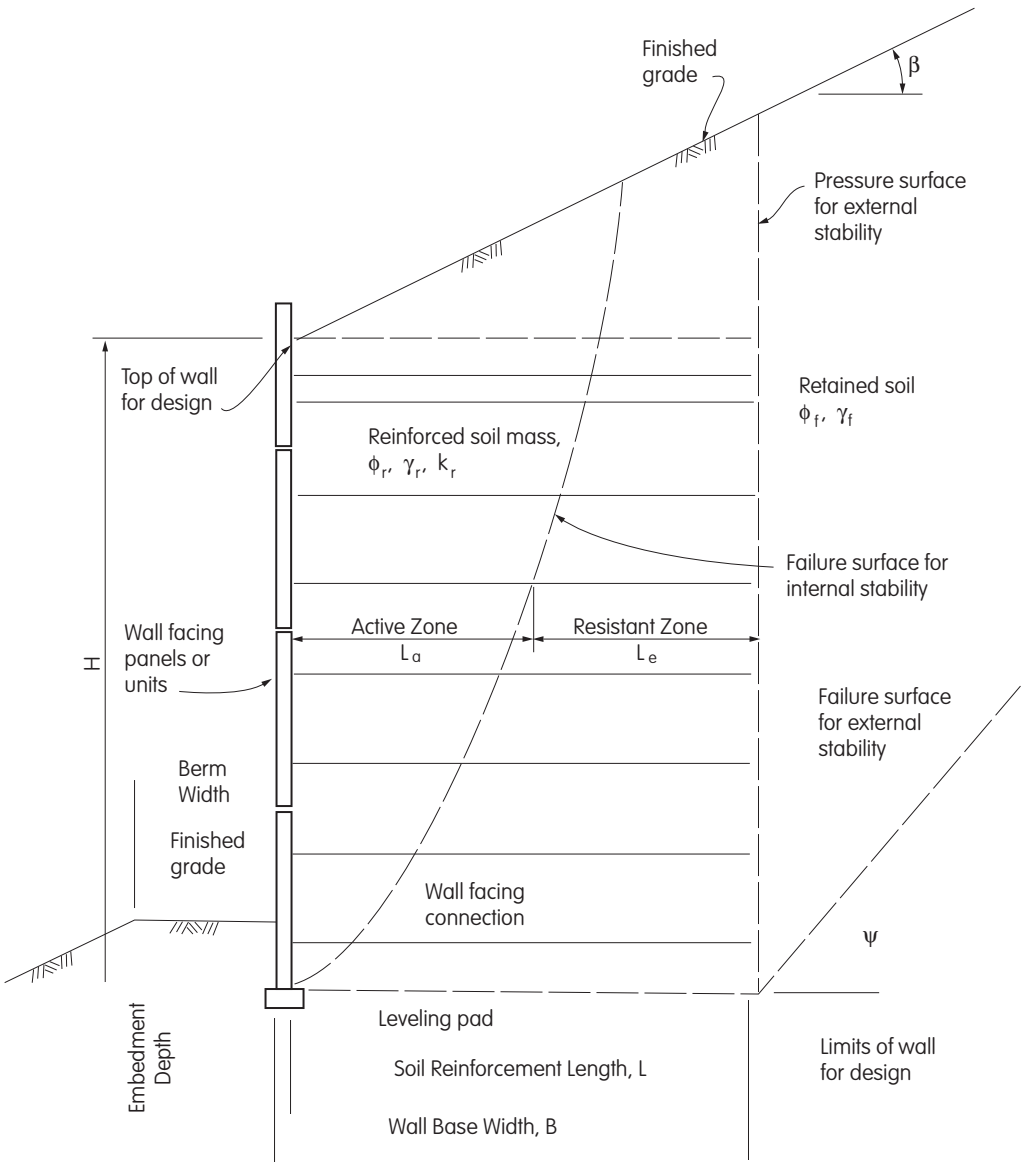


**Figure 5.9.1-1 MSE Wall Element Dimensions Needed for Design.**

### 5.9.1 Structure Dimensions

MSE wall element dimensions needed for design are shown in figure 5.9.1-1

MSE walls shall be dimensioned to ensure that the minimum factors of safety required for sliding and overturning stability are satisfied as well as the eccentricity of the base reaction not exceeding the maximum allowed. In addition, the minimum factors of safety for foundation bearing capacity and soil reinforcement pullout resistance shall be satisfied, as well as overall stability requirements as provided in Article 5.2.2.3.

The soil reinforcement length shall be calculated based on external and internal stability considerations. Soil reinforcement length, $L$, shall be as a minimum 70 percent of the wall height, $H$, and not less than 8 feet. The soil reinforcement length shall be uniform throughout the entire height of the wall, unless substantiating evidence indicates that variation in length is satisfactory or additional length is required locally to resist concentrated loads. External loads such as surcharges may increase the minimum soil reinforcement length. Greater soil reinforcement lengths may also be required for walls founded on soft soil sites and to satisfy global stability requirement.

The minimum embedment depth of the bottom of the reinforced soil mass shall be based on bearing capacity, settlement and stability requirements, also the effects of frost heave, scour, proximity to slopes, erosion, and the potential future excavation in front of the wall shall be considered. In addition to general bearing capacity, settlement, and stability considerations, the minimum embedment required shall consider the potential for local bearing capacity failure under the leveling pad or footing due to higher vertical stresses transmitted by the facing. The minimum embedment depth shall be 2 feet or, 0.1H, whichever is greater. The lowest level of soil reinforcement shall be located a minimum of 0.5 feet below the level of the finished grade in front of the wall.

A minimum horizontal berm 4 feet or, 0.1H, wide whichever is greater shall be provided in front of walls founded on slopes.

For walls constructed along rivers and streams, embedment depth shall be established at a minimum of 2 feet below potential scour depth as determined in accordance with Article 5.3.5.

### 5.9.2 External Stability

The length of soil reinforcement for MSE walls shall be determined to ensure stability against failure modes by satisfying the following stability criteria:

- Sliding – Factor of safety, $FS_{SL} \geq 1.5$
- Overturning – factor of safety, $FS_{OT} \geq 2.0$, and

  - Maximum eccentricity of the resultant force acting on the base of wall, $e_{\max} \leq \frac{L}{6}$
- Bearing capacity - factor of safety, $FS \geq 2.0$.

Stability determinations shall be made assuming the reinforced soil mass and facing to be a coherent gravity mass. The design lateral earth pressure acting on the pressure surface at the end of the soil reinforcement shall be determined in accordance with Article 5.5.5.8 using the friction angle and unit weight of the retained soil. For battered walls with an inclined pressure surface, Coulomb's theory may be used assuming the wall friction angle, $d$, equals, $b$, or $B$. For standardized wall designs a friction angle equal to 34 degrees may be assumed for the retained soil and 30 degrees for the foundation soil.

In developing the total design lateral pressures acting on the pressure surface, the lateral pressure due to surcharge loads shall be added to the design lateral earth pressure. Refer to Article 5.5.5.10 for the determination of design lateral pressures due to surcharge loads.

When groundwater levels may exist within the reinforced soil mass and/or retained soil, they shall be considered in stability determinations.

The resistance due to passive lateral earth pressure in front of an MSE wall shall be neglected in sliding and overturning stability determinations.

For external stability determinations the weight and dimensions of the facing elements are typically ignored, although they may be included.

For external stability determinations traffic surcharge loads shall be considered to act beyond the end of the reinforced soil mass.

### 5.9.2.1 Sliding Stability

The factor of safety against sliding , $FS_{SL}$ , shall be determined by summing the horizontal resisting forces of the wall and dividing that sum by the summation of driving forces acting on the wall. The horizontal resisting forces typically only consist of the normal force acting on the base of the wall times the coefficient of sliding resistance. The normal force acting on the base consists of the weight of the reinforced soil mass, surcharge loads acting on the top of the reinforced soil mass, and the vertical component of the design lateral pressure acting on the pressure surface. The coefficient of sliding resistance used to calculate the frictional resistance at the base of the wall shall be the minimum of the following determinations:

- Tan ø at the base of the wall, where ø is the friction angle of the reinforced soil or the foundation soil, whichever is the least.

- Tan $r$ if continuous or near continuous soil reinforcement layers are used, where, $r$ , is the soil to reinforcement interface angle for the bottom of the lowest soil reinforcement layer. If site specific data for Tan $r$ is not available, use 0.67 Tan ø for the coefficient of sliding resistance.

The summation of driving forces acting on the wall typically consists of the horizontal component of the design lateral pressure acting on the pressure surface.

### 5.9.2.2 Overturning Stability

The factor of safety against overturning, $FS_{OT}$ , shall be determined by summing the resisting moments about the toe of the wall and dividing that sum by the summation of the driving moments about the toe of the wall. The lower front corner of the reinforced soil mass is typically assumed as the toe of the wall. The resisting moments are typically provided by the weight of the reinforced soil mass, surcharge loads acting on the top of the reinforced soil mass, and the tangential component of the design lateral pressure acting on the pressure surface. The driving moment is typically provided by the horizontal component of the design lateral pressure acting on the pressure surface.

The eccentricity of the location of the resultant force acting on the base of the wall shall be determined and compared with the maximum allowable eccentricity.

### 5.9.2.3 Bearing Capacity

The provisions of Article 4.4.7 apply. Allowable bearing capacities for MSE walls shall be determined using a minimum factor of safety of 2.0 for Group 1 loading applied to the ultimate bearing capacity. The width of the footing for determining the ultimate bearing capacity shall be considered to be the length of the soil reinforcement at the foundation level.

Bearing pressures shall be computed using the Meyerhof distribution, which considers a uniform base pressure distribution over an effective base width, $B' = L\text{-}2e$. When the value for $e$, is negative, $B' = L$. Where soft soils are present or if on sloping ground, the difference in bearing stress determined for the wall reinforced soil zone relative to the local bearing stress beneath the facing elements shall be considered when evaluating bearing capacity. This is especially important where concrete wall facings are used due to their weight. Furthermore, differential settlements between the facing elements and the reinforced soil zone of the wall due to concentrated bearing stresses from the facing weight on soft soil could create concentrated stresses at the connection between the facing elements and the wall soil reinforcement. In both cases, the leveling, pad shall be embedded adequately to meet bearing capacity and settlement requirements or dimensioned and designed to keep bearing stresses beneath the leveling pad and the remainder of the wall as uniform as possible.

### 5.9.2.4 Overall Stability

Overall stability analyses shall be performed in accordance with Article 5.2.2.3. Additionally for MSE walls with complex geometrics, compound failure surfaces which pass through a portion of the reinforced soil mass shall be analyzed, especially where the wall is located on sloping or soft ground where overall stability is marginal. Factors of safety and methods of analysis provided in Article 5.2.2.3 are still applicable. The long-term strength of those levels of soil reinforcement extending beyond a failure surface should be considered as restoring forces in the limit equilibrium slope stability analysis.

### 5.9.3 Internal Stability

Internal stability design is dependent on the soil reinforcement extensibility and material type. In general, inextensible soil reinforcement consists of metallic strips, bar mats or welded wire mats, whereas extensible soil reinforcement consists of geotextiles or geogrids. Inextensible soil reinforcement reaches it's peak strength at strains lower than the strain required for the reinforced soil to reach its peak strength. Extensible soil reinforcement reaches its peak strength at strains greater than the strain required for the reinforced soil to reach its peak strength. Internal stability failure modes include soil reinforcement rupture (ultimate limit state), soil reinforcement pullout (ultimate limit state), and excessive elongation under the design load (serviceability limit state). The serviceability limit state is not evaluated in current practice for internal stability design. Internal stability is determined by equating the tensile load applied to the soil reinforcement to the allowable tension for the soil reinforcement, the allowable tension being governed by soil reinforcement rupture and pullout.

The load in the soil reinforcement is determined at two critical locations, i.e. at the zone of maximum stress and at the connection with the wall face, to assess the internal stability of the wall system. Potential for soil reinforcement rupture and pullout are evaluated at the zone of maximum stress. The zone of maximum stress is assumed to be located at the boundary between the active zone and the resistant zone. Potential for soil reinforcement rupture and connection failure are evaluated at the connection of the soil reinforcement to the wall facing.

For the determination of the horizontal forces and pullout resistance within the reinforced soil mass for permanent or temporary MSE walls, a friction angle of 34° may be assumed for the reinforced soil mass. Backfill for the reinforced soil mass shall consist of material free from organic material and substantially free of shale or other soft, poor durability particles and shall not contain slag aggregate or recycled materials such as glass, shredded tires, portland cement concrete rubble, asphaltic concrete rubble or other unsuitable material, and shall conform to the following requirements:

For MSE walls with inextensible soil reinforcement (Metallic soil reinforcement),

| Gradation Requirements | | |
|---|---|---|
| Sieve Size | Percentage Passing | California Test |
| 6" | 100 | 202 |
| 3" | 78-100 | 202 |
| #4 | *--- | 202 |
| #30 | 0-60 | 202 |
| #200 | 0-25 | 202 |

| Property Requirements | | |
|---|---|---|
| Test | Requirement | California Test |
| Sand Equivalent | 12 min. | 217 |
| Plasticity Index | 10 max. | 204 |
| Minimum Resistivity | 1500 ohm - cm min. | 643 |
| Chlorides | <500ppm | 422 |
| Sulfates | <2000 ppm | 417 |
| pH | 5.5 to 10.0 | 643 |

* If 12 percent or less passes the #200 sieve and 50 percent or less passes the #4 sieve, the Sand Equivalent and Plasticity Index requirements shall not apply.

For MSE walls with extensible soil reinforcement (geosynthetics),

| Gradation Requirements | | |
|---|---|---|
| Sieve Size | Percentage Passing | California Test |
| 2" | 100 | 202 |
| #4 | 50-80 | 202 |
| #40 | 0-30 | 202 |
| #200 | 0-15 | 202 |

| Property Requirements | | |
|---|---|---|
| Test | Requirement | California Test |
| Sand Equivalent | 30 min. | 217 |
| Plasticity Index | 10 max. | 204 |
| Durability Index | 35 min. | 229 |
| pH | 4.5 to 9.0 | 643 |

For the determination of the horizontal forces and pullout resistance within the reinforced soil mass for temporary MSE walls, a friction angle of 28° may be assumed for the reinforced soil mass. Backfill for the reinforced soil mass shall consist of material free from organic material or other unsuitable material, and shall conform to the following requirements:

| Gradation Requirements | | |
|---|---|---|
| Sieve Size | Percentage Passing | California Test |
| * 6" | 100 | 202 |
| ** 4" | 100 | 202 |
| # 200 | 0-50 | 202 |

| Property Requirements | | |
|---|---|---|
| Test | Requirement | California Test |
| Sand Equivalent | 8 min. | 217 |
| Plasticity Index | 15 max. | 204 |
| * Minimum Resistivity | 1500 ohm - cm min. | 643 |
| * Chlorides | < 500 ppm | 422 |
| * Sulfates | < 2000 ppm | 417 |
| * pH | 5.5 to 10.0 | 643 |
| ** pH | 4.5 to 9.0 | 643 |

*Applies only for MSE walls with inextensible soil reinforcement

** Applies only for MSE walls with extensible soil reinforcement

### 5.9.3.1 Determination of Maximum Soil Reinforcement Loads.

The maximum soil reinforcement load, $T_{max}$, shall be determined using the Coherent Gravity method for walls with inextensible soil reinforcement and the Simplified Coherent Gravity Method for walls with extensible soil reinforcement. For both these methods, the load in the soil reinforcement is obtained by multiplying a lateral earth pressure coefficient, $K_r$, by the vertical soil stress, $s_v$, at the level of the soil reinforcement and applying the resulting horizontal soil stress, $s_h$, to the tributary area, $A_t$, for the soil reinforcement as follows:

$$T_{max} = s_h A_t \qquad (5.9.3.1\text{-}1)$$

$$A_t = b_t h_t \qquad (5.9.3.1\text{-}2)$$

$$s_h = s_v K_r + D s_h \qquad (5.9.3.1\text{-}3)$$

Where, $D s_h$, is the horizontal soil stress at the level of soil reinforcement under consideration due to concentrated horizontal surcharge loads, see Article 5.5.5.10.4, $b_t$, is the width of the tributary area and, $h_t$, is the height of the tributary area. For walls with face panels, the width of the tributary area is generally equal to the panel width or a multiple of the panel width. The height of the tributary area depends on the location of the level of soil reinforcement under consideration. For the top level of soil reinforcement, $h_t$, equals the distance from the top of wall to the level of soil reinforcement plus one half the distance to the next lower level of soil reinforcement. The top of wall is considered the level at which the finished grade intersects the back of the wall face. For intermediate levels of soil reinforcement, $h_t$, equals one half the distance to the next higher level of soil reinforcement plus one half the distance to the next lower level of soil reinforcement. For the bottom level of soil reinforcement, $h_t$, equals one half the distance to the next higher level of soil reinforcement plus the distance to the bottom of wall. The bottom of the wall is generally considered to be the level of the top of leveling pad under the face of the wall.

The vertical soil stress, $s_v$, and the lateral earth pressure coefficient, $K_r$, shall be determined in accordance with Articles 5.9.3.1.1. and 5.9.3.1.2, for inextensible and extensible soil reinforcement respectively.

*5.9.3.1.1 Inextensible Soil Reinforcement*

The Coherent Gravity Method shall be used to determine, $s_v$, as follows:

$$s_v = s_m + Ds_v \qquad (5.9.3.1.1\text{-}1)$$

Where, $s_m$, equals the vertical soil stress at the level of soil reinforcement under consideration due to the weight of the soil overburden, distributed vertical surcharge loads above the reinforced soil mass and lateral earth pressure acting on the pressure surface and using the Meyerhof procedure, and where, $Ds_v$, equals the vertical soil stress at the level of soil reinforcement under consideration due to concentrated vertical surcharge loads, see Article 5.5.5.10.4.

The lateral earth pressure coefficient, $K_r$, shall equal the at-rest lateral earth pressure coefficient, $K_o$, at the level of the top of the wall and vary linearly with depth to a value equal to the active lateral earth pressure coefficient at a depth of 20 feet below the top of the wall, and remain constant at this value for depths greater than 20 feet from the top of the wall. The at-rest lateral earth pressure coefficient, $K_o$, shall be determined in accordance with Article 5.5.5.2 assuming, $b$, equal to zero. The active lateral earth pressure coefficient, $K_a$, shall be determined in accordance with the Coulomb Theory and Article 5.5.5.3 assuming, $b$, $d$, and, $q$, all are equal to zero.

*5.9.3.1.2 Extensible Soil Reinforcement*

The Simplified Coherent Gravity Method shall be used to determine, $s_v$, as follows:

$$s_v = s_{avg} + Ds_v \qquad (5.9.3.1.2\text{-}1)$$

Where, $s_{avg}$, equals the average vertical soil stress at the level of soil reinforcement under consideration due to the weight of the soil overburden and distributed vertical surcharge loads above the level of soil reinforcement, and where, $Ds_v$, is as noted in Article 5.9.3.1.1.

The lateral earth pressure coefficient, $K_r$, shall equal the active lateral earth pressure coefficient which shall be determined in accordance with the Coulomb Theory and Article 5.5.5.3 assuming, $b$, $d$, and, $q$, all are equal to zero.

### 5.9.3.2. Determination of Maximum Soil Reinforcement Load at the Wall Face

The maximum soil reinforcement tensile load at the wall face, $T_o$, shall be equal to, $T_{max}$, for the corresponding level of soil reinforcement for all wall systems regardless of facing and soil reinforcement type.

### 5.9.3.3. Determination of Soil Reinforcement Length for Internal Stability

*5.9.3.3.1 Location of Zone of Maximum Horizontal Soil Stress*

The location of the zone of maximum horizontal soil stress for wall systems with inextensible and extensible soil reinforcement, which forms the boundary between the active and resistant zones and which is assumed to be the failure surface for internal stability, is determined as shown in Figure 5.9.3.3.1-1. For all wall systems, the zone of maximum horizontal soil stress shall be assumed to begin at the back of the facing elements at the toe of the wall.

For wall systems with extensible soil reinforcement, the zone of maximum horizontal soil stress, as defined by the angle, $y$, from horizontal, should be determined using the Coulomb theory. In applying the Coulomb theory, the back of the wall facing elements shall be assumed to be the pressure surface and, $d$, the wall friction angle shall be assumed equal to, $b$, or, $B$, where, $b$, equals the slope of the backfill surface behind the wall face and, $B$, is the notional slope of the backfill associated with a broken back backfill surface behind the wall face as shown in Figure 5.5.5.8-3.

Concentrated surcharge loads shall be considered in the determination of the location of the zone of maximum horizontal soil stress.

*5.9.3.3.2 Soil Reinforcement Pullout Design*

The soil reinforcement pullout resistance shall be checked for adequacy at each level against pullout failure for internal stability. Only the effective pullout length which extends beyond the potential failure surface for

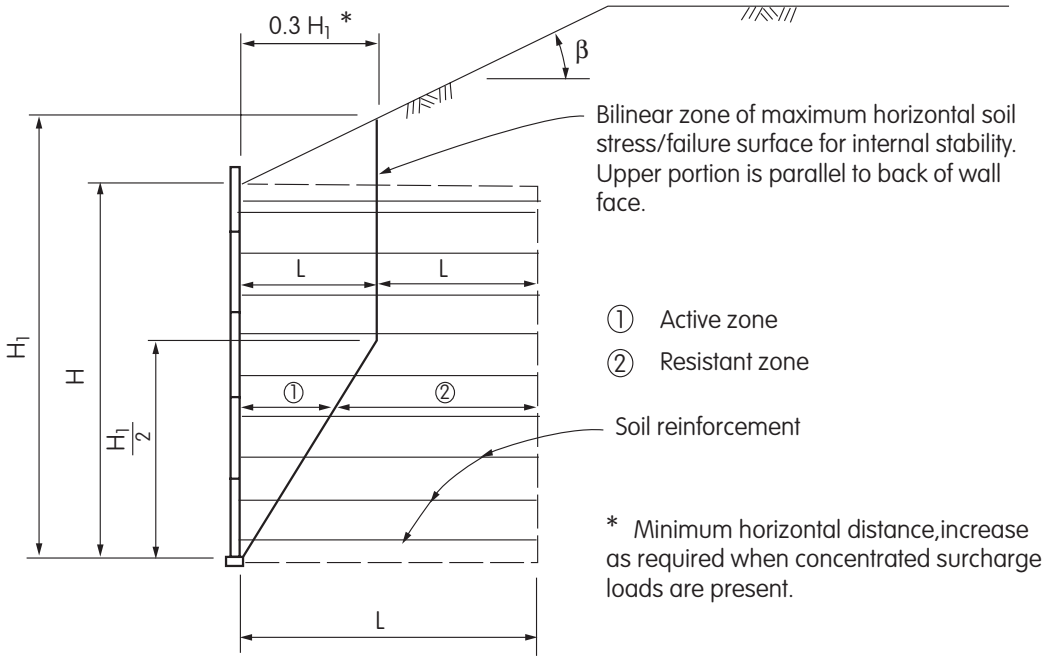


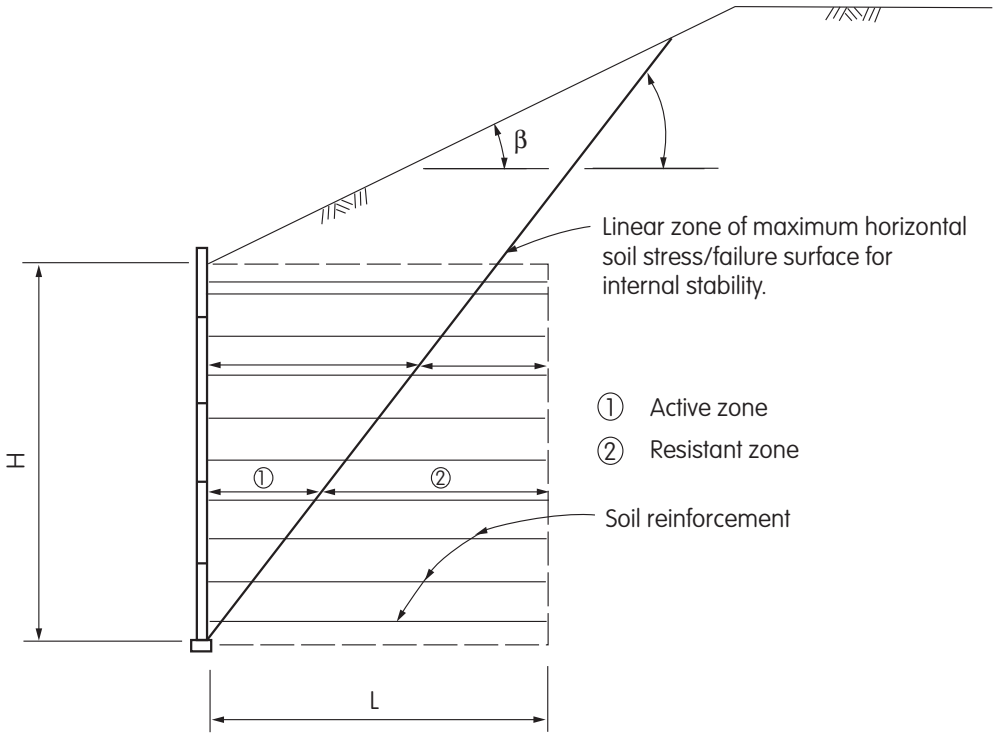


**Figure 5.9.3.3.1-1 Location of Potential Failure Surface for Internal Stability Design of MSE Walls**

internal stability shall be used in the determination of pullout resistance. The minimum effective pullout length shall be 3 feet. In the determination of the vertical soil stress at each level of soil reinforcement, only permanent loads should be considered.

The pullout resistance provided at each level of soil reinforcement shall provide a minimum factor of safety against pullout equal to 1.5 as determined by the following equation:

$$FS_{po} = \frac{R_{po}}{T_{\max}} \qquad (5.9.3.3.2\text{-}1)$$

Where, $FS_{po}$, is the factor of safety against pullout of the soil reinforcement under consideration, $T_{max}$, is the maximum soil reinforcement load in the soil reinforcement under consideration, and, $R_{po}$, is the pullout resistance of the soil reinforcement under consideration and is determined as follows:

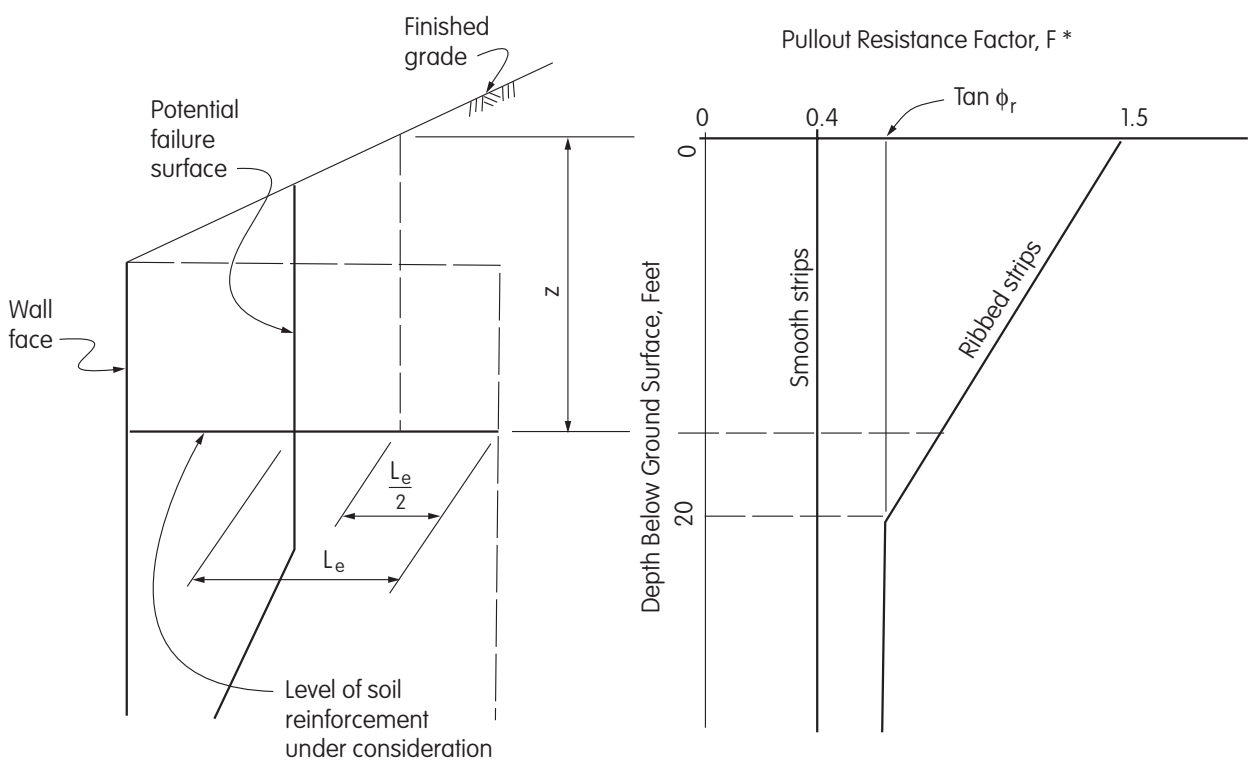


**Figure 5.9.3.3.2-1 Pullout Resistance Factor for Steel Strip Soil Reinforcement**

For geosynthetic soil reinforcement,

$$R_{po} = F^* L_e C B a s_v \qquad (5.9.3.3.2\text{-}2)$$

Where, $F^*$, is the pullout resistance factor, $L_e$, is the length of soil reinforcement in the resistant zone, $C$, is an overall soil reinforcement surface area geometry factor and is equal to *2* for strip, grid, and sheet type soil reinforcements, $B$, is the width of the soil reinforcement, $a$, is a scale effect correction factor and is equal to one or less, $s_v$, is the minimum vertical soil stress at the level of soil reinforcement under consideration within the length, $L_e$.

The values for, $F^*$, and, $a$, are product specific and should be determined by appropriate testing. In the absence of product specific values a default value of 0.67 $Tan\, ø_r$ may be assumed for, $F^*$, and default values of 0.8 and 0.6 may be assumed for, $a$, for geogrids and geotextiles respectively.

For steel strip soil reinforcement,

$$R_{po} = 2F^* L_e B s_v \qquad (5.9.3.3.2\text{-}3)$$

Where, $F^*$, $L_e$, and, $B$, are as defined for geosynthetic soil reinforcement and, $s_v$, is the vertical soil stress at the mid-point of, $L_e$, at the level of soil reinforcement under consideration.

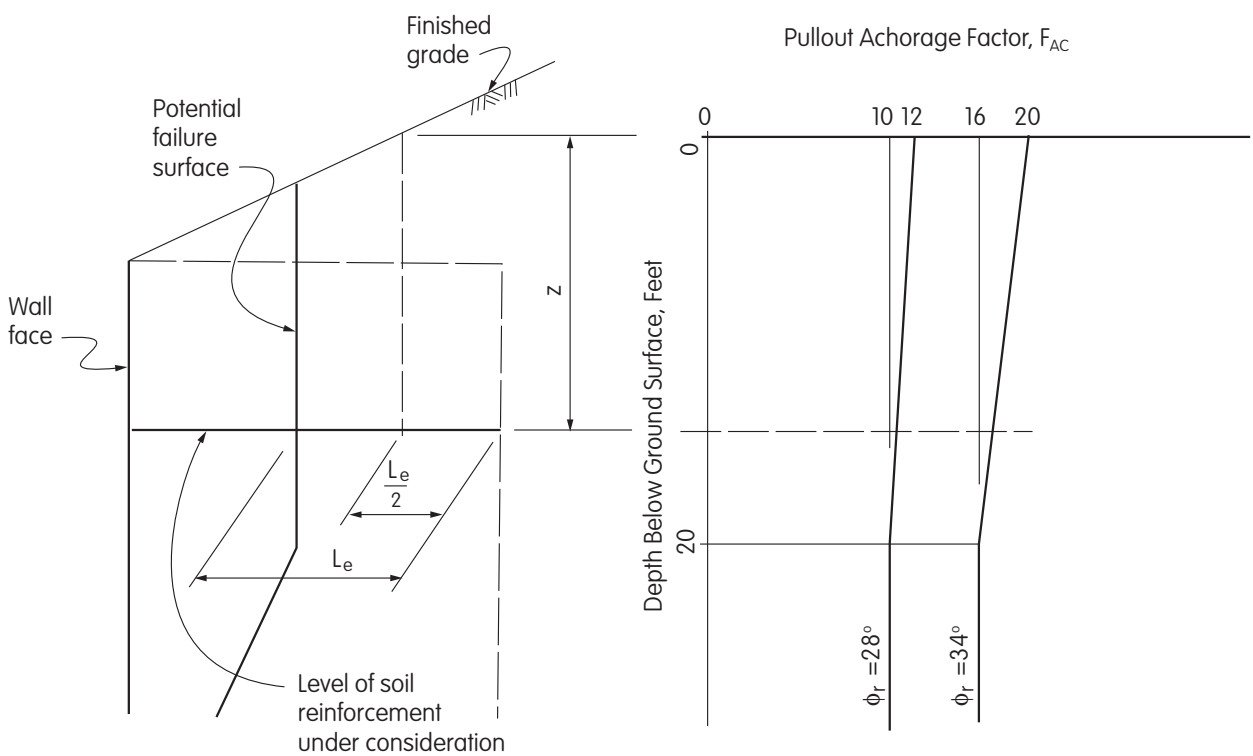


**Figure 5.9.3.3.2-2 Pullout Anchorage Factor for Steel Grid Soil Reinforcement**

The values for, $F^*$, and, $s_v$, are based on the depth, $z$, below the ground surface (finished grade) as shown in Figure 5.9.3.3.2-1.

For steel grid soil reinforcement,

$$R_{po} = F_{AC} NB\, d_{bnet} s_v \qquad (5.9.3.3.2\text{-}4)$$

Where, $F_{AC}$, is the pullout anchorage factor, $L_e$, is the length of soil reinforcement in the resistant zone, $N$, is the number of transverse grid elements of the soil reinforcement within the length, $L_e$, $B$, is the length of the transverse grid elements, $d_{bnet}$, is the net diameter of the transverse grid elements after consideration for corrosion loss, and, $s_v$, is the vertical soil stress at the mid point of, $L_e$, at the level of soil reinforcement under consideration.

The values for, $F_{AC}$ and, $s_v$, are based on the depth, $z$, below the ground surface (finished grade) as shown in Figure 5.9.3.3.2-2.

For welded wire faced walls with grid type soil reinforcement with longitudinal wire spacing greater than six inches center to center, the values for, $F_{AC}$, shall be determined from pull-out tests but shall not be greater than those values shown in Figure 5.9.3.3.2-2

The value for, $d_{bnet}$, may be determined by the following relationship:

$$d_{bnet} = \left( \frac{2(A_{gross} + A_{net})}{p} \right)^{0.5} \qquad (5.9.3.3.2\text{-}5)$$

Where, $A_{gross}$, is the cross sectional area of the transverse grid element before any sacrificial steel loss due to corrosion and, $A_{net}$, is the cross sectional area of the transverse grid element at the end of the design service life after the design sacrificial steel loss has occurred.

For steel grid soil reinforcement, the spacing between transverse grid elements shall be uniform throughout the length of the soil reinforcement. The transverse grid element spacing may vary between levels of soil reinforcement but the spacing shall not be less than 6 inches nor more than 30 inches.

### 5.9.3.4 Reinforcement Strength Design

The strength of the soil reinforcement needed, for internal stability, to resist the maximum load applied throughout the design life of the wall shall be determined at every level within the wall height.

Therefore, for the maximum load at each level of reinforcement,

$$T_{\max} \le T_a \qquad (5.9.3.4\text{-}1)$$

Where, $T_{max}$, is determined in accordance with Article 5.9.3.1 and, $T_a$, is the long-term allowable strength of the soil reinforcement associated with the tributary area, $A_t$, used in determining, $T_{max}$. $T_a$, shall be determined in accordance with Article 5.9.3.4.2.1 for steel reinforcement and Article 5.9.3.4.2.2. for geosynthetic reinforcement.

The difference in the environment occurring immediately behind the wall face relative to the environment within the reinforced backfill zone and its effect on the long-term durability of the soil reinforcement/connection shall be considered when determining, $T_a$, since, $T_o$, equals, $T_{max}$.

#### *5.9.3.4.1 Design Service Life Requirements*

Soil reinforcement, including connections to the facing, in MSE walls shall be designed to have a corrosion resistance/durability to ensure a minimum design service life. For permanent walls with steel soil reinforcement, a design service life of 50 years is a minimum. For permanent walls with geosynthetic soil reinforcement, a design service life of 75 years is a minimum. The greater design service life for geosynthetic soil reinforcement is due to the large influence creep has on the long-term strength of geosynthetic soil reinforcement. For temporary walls, a design service life of 5 years is a minimum.

##### *5.9.3.4.1.1 Steel Reinforcement*

The structural design of steel soil reinforcements and connections shall be made on the basis of, $F_y$, the yield strength of the steel, and the net cross-sectional area of the steel at the end of the design service life.

Steel soil reinforcement and steel connection elements for permanent walls shall be galvanized with a minimum coating thickness of 2 ounces per square foot applied in conformance with ASTM A 123. This coating shall be assumed to provide 10 years of service life.

The net cross-sectional area of the soil reinforcement, $A_{net}$, shall be determined as follows:

$$A_{net} = A_{gross} - A_{corrosion\ loss} \qquad (5.9.3.4.1.1\text{-}1)$$

Where, $A_{net}$, is the cross-sectional area of the soil reinforcement at the end of the design service life, $A_{gross}$, is the cross-sectional area of the ungalvanized soil reinforcement at the start of the design service life, and, $A_{corrosion\ loss}$, is the cross-sectional area of the soil reinforcement lost due to corrosion over the design service life.

$A_{corrosion\ loss}$, shall be determined by applying a corrosion loss rate to the exposed surface of the soil reinforcement for the remaining design service life after the depletion of the galvanization.

When the backfill for the reinforced soil mass conforms to the requirements in Article 5.9.3, a corrosion loss rate equal to 1.1 mils per year may be used to determine, $A_{corrosion\ loss}$.

When the backfill for the reinforced soil mass conforms to the following requirements for select granular backfill, a corrosion loss rate equal to 0.5 mils per year may be used to determine, $A_{corrosion\ loss}$.

Select granular backfill for the reinforced soil mass shall consist of material free from organic material and substantially free of shale or other soft, poor durability particles and shall not contain slag aggregate or recycled materials such as glass, shredded tires, portland cement concrete rubble, asphaltic concrete rubble or other unsuitable material, and shall conform to the following requirements:

| Gradation Requirements | | |
|---|---|---|
| Sieve Size | Percentage Passing | California Test |
| 6" | 100 | 202 |
| 3" | 75-100 | 202 |
| # 4 | 0-25 | 202 |
| # 200 | 0-5 | 202 |

| Property Requirements | | |
|---|---|---|
| Test | Requirement | California Test |
| Plasticity Index | 6 max | 204 |
| Minimum Resistivity | 1500 ohm - cm min. | 643 |
| Chlorides | < 500 ppm | 422 |
| Sulfates | < 2000 ppm | 417 |
| pH | 5.5 to 10.0 | 643 |

The above corrosion loss rates account for potential pitting mechanisms and much of the uncertainty due to data scatter. These corrosion loss rates are not applicable in applications where:

- the MSE wall will be exposed to a marine or other chloride rich environment;
- the soil reinforcement is continuously connected in a direction parallel to a source of stray currents such as from nearby underground power lines or adjacent electric rail lines;
- the backfill material is aggressive; or
- the galvanizing coating thickness is less than specified.

Each of these situations creates a special set of conditions which should be specifically analyzed by a corrosion specialist.

Epoxy coatings are not considered equivalent to galvanizing.

*5.9.3.4.1.2 Geosynthetic Reinforcement*

The durability of geosynthetic reinforcements is influenced by environmental factors such as time, temperature, mechanical damage, stress levels, and chemical exposure (e.g., oxygen, water, and *pH*, which are the most common chemical factors). Microbiological attack may also affect certain polymers, though in general most of the polymers used for carrying load in soil reinforcement applications are not affected by this. The effects of these factors on product durability are dependent on the polymer type used (i.e. resin type, grade, additives, and manufacturing process) and the macrostructure of the reinforcement. Not all of these factors will have a significant effect on all geosynthetic products. Therefore, the response of geosynthetic reinforcements to these long-term environmental factors is product specific.

However, within specific limits of wall application, soil conditions, and polymer type, strength degradation due to these factors can be anticipated to be minimal and relatively consistent from product to product, and the impact of any degradation which does occur will be minimal. Even with product specific test results, $RF_{ID}$ and $RF_D$ shall be no less than 1.1 each.

For conditions which are outside these defined limits (i.e. applications in which the consequences of poor performance or failure are severe, aggressive soil conditions, or polymers which are beyond the specific limits set), or if it is desired to use an overall reduction factor which is less than the default reduction factor recommended herein, then product specific durability studies shall be carried out prior to use. These product specific studies shall be used to estimate the short-term and long-term effects of these environmental factors on the strength and deformational characteristics of the geosynthetic reinforcement throughout the reinforcement design life.

Wall application limits, soil aggressiveness, polymer requirements, and the calculation of long-term reinforcement strength are specifically described as follows:

1) Structure Application Issues: Applications for which the consequences of poor performance or failure are severe consist of walls which support important structures, critical utilities, or other facilities for which the consequences of poor performance would be severe. In such applications, a single default reduction factor shall not be used for design.

2) Determination of Soil Aggressiveness: Soil shall be considered aggressive when any one of the following conditions exist:

- the maximum soil particle size is greater than 0.75 inches unless full scale installation damage tests are conducted in accordance with ASTM D 5818,
- the *pH* of the soil is less than 4.5 or greater than 9.0,
- the design temperature at the all site is greater than 85°F, and
- the soil organic content (determined by AASHTO T267-86) for material finer than the No.10 sieve is greater than one-percent.

The effective design temperature is defined as the temperature which is halfway between the average yearly air temperature and the normal daily air temperature for the warmest month at the wall site. Note that for walls which face the sun, it is possible that the temperature immediately behind the facing could be higher than the air temperature. This condition should be considered when assessing the design temperature, especially for wall sites located in warm, sunny climates.

A single default reduction factor shall not be used in aggressive soil conditions. The environment at the face, in addition to within the wall backfill, shall be evaluated, especially if the stability of the facing is dependent on the strength of the geosynthetic at the face, i.e., the geosynthetic reinforcement forms the primary connection between the body of the wall and the facing.

The chemical properties of the native soil surrounding the reinforced soil backfill shall also be considered if there is potential for seepage of ground water from the native surrounding soils to the reinforced soil backfill. If this is the case, the surrounding soils shall also meet the chemical criteria required for the backfill material if the environment is to be considered non-aggressive, or adequate long-term drainage around the geosythetic reinforced soil mass shall be provided to ensure that chemically aggressive liquid does not enter into the reinforced backfill.

3) Polymer Requirements: Polymers which are likely to have good resistance to long-term chemical degradation shall be used if a single default reduction factor is to be used, to minimize the risk of the occurrence of significant long-term degrtadation. The polymer material requirements provided in Table 5.9.3.4.1.2A shall therefore be met if detailed product specific data as described in FHWA Publication No.FHWA SA-96-071 "Mechanically Stabilized Earth Walls and Reinforced Soil Slopes Design and Construction Guidelines" – Appendix B, and in FHWA Publication No. FHWA SA-96-072 " Corrosion/Degradation of Soil Reinforcements for Mechanically Stabilized Earth Walls and Reinforced Soil Slopes" is not obtained. Polymer materials not meeting the requirements in Table 5.9.3.4.1.2A could be used if this detailed product specified data extrapolated to the design life intended for the structure is obtained.

4) Calculation of Long-Term Reinforcement Strength: for ultimate limit state conditions.

$$T_{al} = \frac{T_{ult} b}{RF} \qquad (5.9.3.4.1.2\text{-}1)$$

where,

$$RF = RF_{ID} \times RF_{CR} \times RF_{D} \qquad (5.9.3.4.1.2\text{-}2)$$

$T_{al}$, is the long-term tensile strength required to prevent rupture of the reinforcement, $b$, is the width of the reinforcement, $T_{ult}$, is the ultimate tensile strength of the reinforcement determined from wide width tensile tests (ASTM D 4595) for geotextiles and geogrids, or rib tensile test for geogrids (GRI: GG1, but at a strain rate of 10 percent per minute), $RF$, is a combined strength reduction factor to account for potential long-term degradation due to installation damage, creep and chemical aging, $RF_{ID}$ is a strength reduction factor to account for installation damage to the reinforcement, $RF_{CR}$ is a strength reduction factor to prevent long-term creep rupture of the reinforcement, *and* $RF_{D}$ is a strength reduction factor to prevent rupture of the reinforcement due to chemical and biological degradation. The value selected for $T_{ult}$ shall be the minimum average roll value ( MARV) for the product to account for statistical variance in the material strength.

Values for, $RF_{ID}$ , $RF_{CR}$, and, $RF_{D}$ , shall be determined from product specific test results. Even with product specific test results, $RF_{ID}$ , and, $RF_{D}$ , shall be no less than 1.1 each.

Guidelines for how to determine, $RF_{ID}$ , $RF_{CR}$, and, $RF_{D}$, from product specific data are provided in FHWA Publication No. FHWA SA-96-071 " Mechanically Stabilized Earth Walls and Reinforced Soil Slopes Design and Construction Guidelines"- Appendix B, and in FHWA Publication No. FHWA SA-96-072 "Corrosion/Degradation of Soil Reinforcements for Mechanically Stabilized Earth Walls and Reinforced Soil Slopes." For wall applications which are defined as not having severe consequences should poor performance or failure occur having nonaggressive soil conditions, and if the geosyntethic product meets the minimum requirements listed in Table 5.9.3.4.1.2A, the long-term tensile strength of the reinforcement may be determined using a default reduction factor for, $RF$ , as provided in Table 5.9.3.4.1.2B in lieu of product specific test results.

TABLE 5.9.3.4.1.2A Minimum Requirements for Geosynthetic Products to Allow Use of Default Reduction Factor for Long-Term Degradation

| Polymer Type | Property | Test Method | Criteria to Allow Use of Default RF* |
|---|---|---|---|
| Polypropylene | UV Oxidation Resistance | ASTM D4355 | Min.70% strength retained after 500 hrs in weatherometer |
| Polyethylene | UV Oxidation Resistance | ASTM D4355 | Min.70% strength retained after 500 hrs in weatherometer |
| Polyester | Hydrolysis Resistance | Inherent Viscosity Method (ASTM D4603 and GRI Test Method GG8**) or Determine Directly Using Gel Permeation Chromatography | Min.Number Average Molecular Weight of 25,000 |
| Polyester | Hydrolysis Resistance | GRI Test Method GG7 | Max.of Carboxyl End Group Content of 30 |
| All Polymers | Survivability | Weight per Unit Area (ASTM D5261) | Min.270 g/m² |
| All Polymers | % Post-Consumer Recycled Material by Weight | Certification of Material Used | Maximun of 0% |

*Polymers not meeting these requirements may be used if product specific test results obtained and analyzes in accordance with FHWA Publication No. FHWA SA-96-071 "Mechanically Stabilized Earth Walls and Reinforced Soil Slopes Design and Construction Guidelines" – Appendix B, and in FHWA Publication No. FHWA SA-96-072 "Corrosion /Degradation of Soil Reinforcements for Mechanically Stabilized Earth Walls and Reinforced Soil Slopes" are provided.

**These test procedures are in draft form. Contact the Geosythetic Research Institute, Drexel University in Philadelphia, PA.

TABLE 5.9.3.4.1.2B Default and Minimum Values for the Total Geosyntheic Ultimate Limit State Strength Reduction Factor, RF

| **Application** | **Total Reduction Factor, RF** |
|---|---|
| All applications, but with product specific data obtained and analyzed in accordance with FHWA Publication No. FHWA SA-96-071 "Mechanically Stabilized Earth Walls and Reinforced Soil Slopes Design and Construction Guidelines"-Appendix B, and FHWA Publication No. FHWA SA-96-072 "Corrosion/Degradation of Soil Reinforcements for Mechanically Stabilized Earth Walls and Reinforced Soil Slopes" | All reduction factors shall be based on product specific data. $RF_{ID}$ and $RF_D$ shall not be less than 1.1 |
| Permanent applications not having severe consequences should poor performance or failure occur, nonaggressive soils, and polymers meeting the requirements listed in Table 5.9.3.4.1.2A, provided product specific data is not available | 7.0 |
| Temporary applications not having severe consequences should poor performance or failure occur, nonaggressive soils, and polymers meeting the requirements listed in Table 5.9.3.4.1.2A, provided product specific data is not available | 3.5 |

### *5.9.3.4.2 Allowable Stresses*

#### *5.9.3.4.2.1 Steel Reinforcements*

The allowable tensile stress for steel reinforcements, connections, and splices, $F_a$, shall be as follows:

- Permanent Structures, $F_a = 0.55F_y$, (5.9.3.4.2.1-1)
- Temporary Structures, $F_a = 0.75F_y$, (5.9.3.4.2.1-2)

The global safety factor, *FS*, of 0.55 applied to, $F_y$, for permanent structures accounts for uncertainties in structure geometry, fill properties, externally applied loads, the potential for local overtress due to load nonuniformities, and uncertainties in long-term reinforcement strength.

The allowable reinforcement tension, $T_a$, is determined by multiplying the allowable tensile stress by the net cross-sectional area of the steel soil reinforcement after corrosion losses. Therefore,

$$T_a = FS \times F_y A_{net} \qquad (5.9.3.4.2.1\text{-}3)$$

where, $F_y$, and, $A_{net}$, are as defined in Article 5.9.3.4.1.1

The minimum thickness of steel strip soil reinforcement shall be 4 millimeters before galvanizing. The minimum thickness if connection elements of bolted connections or splice plates of bolted splices before galvanizing shall be 10 gage. Corrosion losses need not be considered for the faying surfaces of bolted connections or bolted splices of strip soil reinforcements.

The transverse and longitudinal wires of grid type soil reinforcement shall be sized in accordance with ASTM A 185. The size of transverse wires shall not be greater than the size of the longitudinal wires of a grid. Except for walls with exposed welded wire facing the minimum size longitudinal wires for grid reinforcement shall be W11 and their maximum center to center spacing shall be 8 inches maximum. For walls with exposed welded wire facing, the minimum size longitudinal wires for grid reinforcement shall be W8, at 6 inch maximum center to center spacing or W11 or 12 inch maximum center to center spacing.

#### *5.9.3.4.2.2. Geosynthetic Reinforcements*

The allowable tensile load for geosynthetic reinforcement is determined as follows:

$$T_a = \frac{T_{al}}{FS} \qquad (5.9.3.4.2.2\text{-}1)$$

Where, $T_{al}$, is the long-term reinforcement strength as determined in Article 5.9.3.4.1.2 and, *FS*, is a global safety factor which accounts for uncertainties in structure geometry, fill properties, externally applied loads, the potential for local overstress due to load nonuniformitiies, and uncertainties in long-term reinforcement strength. For permanent walls, a, *FS*, of 1.5 shall be used. For temporary walls, a, *FS*, of 1.3 may be used along with a minimum value for, *RF*, equal to 3.5. Note that the uncertainty of determining long-term reinforcement

strength is taken into account through an additional factor of safety, which is typically about 1.2, depending on the amount of creep data available, through the creep extrapolation protocol provided in Appendix B of the FHWA-SA-96-071, "Mechanically Stabilized Earth Walls and Reinforced Soil Slopes Design and Construction Guidelines."

### 5.9.3.5 Soil Reinforcement/Facing Connection Strength Design

The connection of soil reinforcement to MSE wall facing elements shall meet the following minimum criteria:

- the tensile force resisiting capacity shall be at least 2.0 times the design allowable tensile force of the connected soil reinforcement at a total displacement wihtin the connection not exceeding 0.75 inches,
- the connection shall engage directly all longitudinal tensile force resisting elements of the soil reinforcement,
- the connection shall not rely on frictional force resistance where the frictional force depends on the constant force of gravity,
- the design of the connection shall be such that relative displacement between face elements due to differential settlement at the wall face does not result in a significant reduction in the capacity of the connection,
- the design of the connection shall be such that after a level of soil reinforcement has been connected and all elements necessary to complete the connection are in place, but before backfill covers the soil reinforcement, the connection can be visually inspected and a determination made that all elements of the connection are properly in place, and
- the design of the connection shall be such that there is an adequate force resistance path from any face element to at least one soil reinforcement connection.

#### *5.9.3.5.1 Connection Strength for Steel Soil Reinforcements*

Connections shall be designed using the strength design method to resist a factored load from the soil reinforcement equal to 2.0 times, $T_a$, of the connected soil reinforcement.

The capacity of the designed connection shall be verified by load tests of actual connections. A connection may be considered adequate when:

$$T_T \geq 2.0T_a \qquad (5.9.3.5.1\text{-}1)$$

Where, $T_T$, is the applied test load at failure of the connection or at 0.75 inches displacement within the connection whichever is the least. When the soil reinforcement is connected to the facing at multiple closely spaced locations, group action shall be considered in the test set-up when verifying the connection capacity. The material strengths of the test connection samples shall be determined and the value for, $T_T$, shall be corrected when these determined material strengths exceed the minimum specified strengths for these materials.

Connection materials shall be designed to accommodate losses due to corrosion in accordance with Article 5.9.3.4.1.1. Potential differences between the environment at the face relative to the environment within the reinforcement soil mass shall be considered when assessing potential corrosion losses.

#### *5.9.3.5.2 Connection Strength for Geosynthetic Soil Reinforcements*

The long-term allowable geosynthetic connection strength, $T_{ac}$, on a load per width, *b*, of reinforcement basis shall be determined as follows:

$$T_{ac} = \frac{T_{ult} \times b \times CR_{CR}}{FS \times RF_D} \geq T_a \qquad (5.9.3.5.2\text{-}1)$$

Where:

$T_{ac}$ = long-term allowable reinforcement/ facing connection design strength per width , $b$, of reinforcement (KIPS)

$T_{ult}$ = minimum average roll value (MARV) of ultimate tensile strength of soil reinforcement (KIP/FT)

$b$ = width of soil reinforcement under consideration (FT)

$CR_{CR}$ = long-term connection strength re - duction factor to account for reduced ultimate strength resulting from connection (DIM)

$RF_D$ = reduction factor to prevent rupture of reinforcement due to chemical and biological degradation (DIM)

$FS$ = global safety factor which accounts for uncertainties in externally applied loads, the potential for local connection overstress due to wall settlement or load nonuniformities, and uncertainties in long-term connection strength. (DIM)

Values for, $CR_{CR}$, and, $RF_D$, shall be determined from product specific test results. Note that the environment at the wall face connection may be different than the environment away from the wall face in the wall backfill. This shall be considered when determining, $CR_{CR}$, and, $RF_D$. The minimum value for, $RF_D$, shall be 1.1, the minimum value for, $FS$, shall be 2.0.

Guidelines for determining, $CR_{CR}$, and, $RF_D$, from product specific data are provided in "Corrosion/Degradation of Soil Reinforcements for Mechanically Stabilized Earth Walls and Reinforced Soil Slopes", Federal Highway Administration, No. FHWA-NHI-00-044, 2001 and "Mechanically Stabilized Earth Walls and Reinforced Soil Slopes Design and Construction Guidelines", Federal Highway Administration, FHWA-NHI-00-043, 2001.

### 5.9.3.6 Design of Facing Elements

Facing elements shall be designed to resist the horizontal forces specified. In addition to these horizontal forces, the facing elements shall also be designed to resist potential compaction stresses occurring near the wall face during erection of the wall. The facing element shall be designed such that they do not deflect laterally or bulge beyond acceptable limits.

#### *5.9.3.6.1 Design of Stiff or Rigid Concrete, Steel, and Timber Facings*

Concrete and steel facing elements shall be structurally designed in accordance with Sections 8 and 10 respectively using the strength design method provisions. The basic design factored load shall be a distributed horizontal load acting on the entire back face of the face element the resultant of which is equal 1.8 times the sum of the, $T_a$, values of the soil reinforcement connected to the face element. The location of the resultant of this distributed load shall be at the location of the resultant of the, $T_a$, values of the same soil reinforcement.

Top of wall facing elements which support a traffic barrier support slab shall be designed for a horizontal line load acting at the top rear of the facing elements and equal to 1.9 kips per foot. This load is to be considered a factored load, and does not need to be combined with the basic design factored load specified above.

Loads from any appurtenances attached to the facing elements shall be considered.

Timber facing elements shall be structurally designed in accordance with Section 13 using the working stress design method. The basic service load shall be a distributed horizontal load acting on the entire back face of the face element the resultant of which is equal to the sum of the, $T_a$, values of the soil reinforcement connected to the face element. The location of the resultant of this distributed load shall be at the location of the resultant of the, $T_a$, values of the same soil reinforcement.

Loads from any appurtenances attached to the facing elements shall be considered. Timber facing elements shall not be used to support a traffic barrier support slab.

In the design of concrete, steel and timber facing elements the locations of the connected soil reinforcement are considered support locations in resisting the basic design horizontal load.

The maximum vertical spacing of soil reinforcement connected to the facing elements equals 30 inches. The minimum distance from the top or bottom of a facing element to a level of soil reinforcement equals 5 inches. The minimum specified compressive strength, $f'_c$ , for concrete facing elements equals 4000 psi.

### *5.9.3.6.2 Design of Flexible Wall Facings*

Welded wire, expanded metal, or similar facing panels shall be designed in a manner which prevents the occurrence of excessive bulging as backfill behind the facing elements compresses due to compaction stresses or self weight of the backfill. This may be accomplished by limiting the size of individual panels vertically and the vertical spacing of the levels of soil reinforcement, and by requiring the facing panels to have an adequate amount of vertical slip between adjacent panels. The top of flexible facing panels at the top of the wall shall be connected to a level of soil reinforcement to provide stability to the top-facing panel. The maximum vertical spacing of soil reinforcement connected to the facing panels equals 20 inches for permanent walls and 30 inches for temporary walls. The maximum horizontal clear spacing between soil reinforcement elements within a level shall be 12 inches. For welded wire facing panels the minimum wire size shall be W8 for permanent walls and W6 for temporary walls, the maximum center to center spacing of vertical wires shall be 6 inches and of horizontal wires shall be 9 inches. Secondary facing panels shall be provided when necessary to prevent loss of backfill material through the facing panels. Steel facing panels for permanent walls shall be galvanized with a minimum coating thickness of 2 ounces per square foot applied in conformance with ASTM A123.

Geosynthetic facing elements shall not, in general, be left exposed to sunlight ( specifically ultraviolet radiation) for permanent walls. If geosynthetic facing elements must be left exposed permanently to sunlight, the geosynthetic shall be stabilized to be resistant to ultraviolet radiation. Furthermore, product specific test data shall be provided which can be extrapolated to the intended design life and which proves that the product will be capable of performing as intended in an exposed environment.

Flexible wall facings shall not be used to support a traffic barrier support slab.

### *5.9.3.6.3 Design of Segmental Concrete Block Facings*

Segmental concrete block facings shall be designed considering facing stability which shall include an evaluation of the maximum vertical spacing between reinforcement layers, the maximum allowable facing height above the uppermost reinforcement layer, inter-unit shear capacity, and resistance of the facing to bulging. The maximum vertical spacing between reinforcement layers shall be limited to twice the width, $W_U$, of the proposed segmental concrete facing unit or 30 inches, whichever is less, the maximum facing height above the upper most reinforcement layer shall be limited to 1.5 times, $W_U$, or 18 inches, whichever is less, and the maximum depth of facing below the bottom reinforcement layer shall be limited to the width, $W_U$ , where, $W_U$ , is the segmental facing block unit width from front to back.

The minimum specified compressive strength of segmental concrete block facing units shall be 4000 psi. The water absorption limit of segmental concrete block facing units shall be 5 percent maximum. Blocks shall also meet the additional requirements of ASTM C90 and C140.

When the segmental concrete block facing supports a traffic barrier support slab, the provisions of Article 5.9.3.6.1 shall apply.

### *5.9.3.6.4 Corrosion Issues for MSE Facing Design*

Steel to steel contact between the soil reinforcement connections and the concrete facing steel reinforcement shall be prevented so that contact between dissimilar metals (e.g., bare facing reinforcement steel and galvanized soil reinforcement steel) does not occur. Steel to steel contact in this case can be prevented through the placement of a nonconductive material between the soil reinforcement face connection and the facing concrete reinforcing steel.

### 5.9.3.7 Drainage

MSE walls in cut areas and side-hill fills with established ground water levels should be constructed with drainage blankets in back of and beneath the reinforced zone. Internal drainage measures should be considered for all structures to prevent saturation of the reinforced backfill or to intercept any surface flows containing aggressive elements such as deicing chemicals.

For MSE walls utilizing metallic soil reinforcements supporting roadways which are chemically deiced in the winter, an impervious membrane should be placed below the pavement and just above the first level of soil reinforcement to intercept any flows containing deicing chemicals. The membrane should be sloped to drain away from the facing to an intercepting longitudinal drain outletted beyond the reinforced zone. Typically, a minimum membrane thickness of 30 mils should be used. All seams in the membrane shall be welded to prevent leakage.

For MSE walls utilizing metallic soil reinforcement which support a slope which supports a roadway which is chemically deiced in the winter, provisions shall be made to prevent runoff from reaching the soil reinforcement at the back of the face panels at the toe of the slope. As a minimum, an impermeable cap shall be placed on the face of the slope and a continuous coping/gutter which is keyed into the slope shall be constructed at the toe of slope/top of wall.

### 5.9.3.8 Special Loading Conditions

#### *5.9.3.8.1 Concentrated Dead Loads*

Concentrated dead loads shall be incorporated into the internal and external stability design by using a simplified uniform vertical distribution of 2 vertical to 1 horizontal to determine the vertical component of stress with depth within the reinforced soil mass as shown in Figure 5.5.5.10.4-1. Figure 5.5.5.10.4-2 shows how concentrated horizontal dead loads may be distributed within and behind the reinforced soil mass. Depending on the size and location of the concentrated dead load, the location of the boundary between the active and resistant zones may need to be adjusted.

#### *5.9.3.8.2 Traffic Loads and Barriers*

Traffic loads shall be considered in accordance with the criteria outlined in Article 5.5.5.10.5. Traffic loads should be positioned to maximize their effects.

When traffic barriers are placed at the top of MSE walls, they shall be constructed on a support slab which is designed to resist the overturning due to the design horizontal impact load applied to the barrier. The support slab shall be designed so only horizontal and vertical forces are transmitted to the face elements of the wall. The support slab shall be continuous the full length of the wall with no expansion joints. The horizontal forces from the support slab applied to the top of the face elements of the wall shall be in accordance with Article 5.9.3.6.1.

As a minimum, the top level of soil reinforcement shall be designed for a tensile load at the wall face equal to 1.9 kips per foot of wall. This load is to be considered a factored load for which the, $FS_{po}$ , shall be equal to or greater than 1.0 and the load shall be less than or equal to, $1.33T_a$, of the soil reinforcement. the minimum length of the top level of soil reinforcement shall be 16 feet.

When traffic barriers are placed at the top of MSE walls, the minimum height wall shall be 6 feet and the minimum length of wall shall be 40 feet.

#### 5.9.3.8.3 Hydrostatic Pressures

For Structures along rivers and canals, a minimum differential hydrostatic pressure equal to 3 feet of water shall be considered for design. This load shall be applied at the high-water level. Effective unit weights shall be used in the calculations for internal and external stability.

Situations where the wall is influenced by tide or river fluctuations may require that the wall be designed for rapid drawdown conditions, which could result in differential hydrostatic pressure considerably greater than 3 feet or alternatively rapidly draining backfill material such as shot rock or open graded coarse gravel may be used as backfill.

#### 5.9.3.9 Placement of Soil Reinforcement

For a wall supporting a roadway at the top of wall elevation, the top level of soil reinforcement shall be placed sloping downward from horizontal at a negative slope equal to -5% minimum to -15% maximum. Lower levels of soil reinforcement shall be sloped downward also if required to provide a minimum 6 inches of separation between levels of soil reinforcement. The depth of the roadway structural section and cross slope of the roadway should be considered when determining placement details.

For back to back walls for which the soil reinforcement overlaps, the levels of soil reinforcement shall be placed such that a minimum of 3 inches of separation between levels is provided.

## 5.10 PREFABRICATED MODULAR WALL DESIGN

Prefabricated modular walls consist of walls as described in Article 5.2.1.5. Additionally this type wall may consist of precast reinforced concrete elements which are placed or stacked to form a series of "T" shaped modules along the length of the wall with the top of the "T" forming the face of the wall. This type wall is similar to a crib wall except each cell is three sided and open at the back at the pressure surface used for external stability analysis.

### 5.10.1 Structure Dimensions

Prefabricated modular wall dimensions needed for external designs are shown in Figure 5.10.1-1 for a battered three-tier wall.

Prefabricated modular walls shall be dimensioned to ensure that the minimum factor of safeties required for sliding and overturning are satisfied as well as the eccentricity of the base reaction not exceeding the maximum allowed. These requirements apply to each tier of a tiered wall. In addition the minimum factor of safety for foundation bearing capacity shall be satisfied, as well as overall stability requirements as provided in Article 5.2.2.3.

The minimum embedment depth of the bottom of a prefabricated modular wall shall be based on bearing capacity, settlement and stability requirements also the effects of frost heave, scour, proximity to slopes, erosion, and the potential future excavation in front of the wall shall be considered.

The minimum embedment depth and minimum berm width shall be as follows:

| Wall Height H (feet) | Embedment Depth (feet) | Berm Width (feet) |
|---|---|---|
| $\leq 10$ | 2 | 4 |
| $> 10, \leq 30$ | 3 | 4 |
| $> 30$ | 3 | 5 |

For walls constructed along rivers and streams, embedment depth shall be a minimum of 2 feet below potential scour depth as determined in accordance with Article 5.3.5.

### 5.10.2 External Stability

The base width, B, of a prefabricated modular wall shall be determined to ensure stability against failure modes by satisfying the following stability criteria:

- Sliding – Factor of safety, $FS_{SL} \geq 1.5$
- Overturning – Factor of safety, $FS_{OT} \geq 2.0$ and
  - Maximum eccentricity of the resultant force acting on the base of wall, $e_{max} \leq \frac{B}{6}$
- Bearing capacity – Factor of safety, $FS \geq 3.0$

Stability determinations shall be made at every module level assuming the prefabricated modules and any wall fill to be a rigid gravity mass. The design lateral earth pressure acting on the pressure surface at the rear of the wall modules shall be determined using the Coulomb theory and the trial wedge method of analysis as described in Article 5.5.5.5. Where the rear of the wall modules form an irregular surface (stepped or tiered

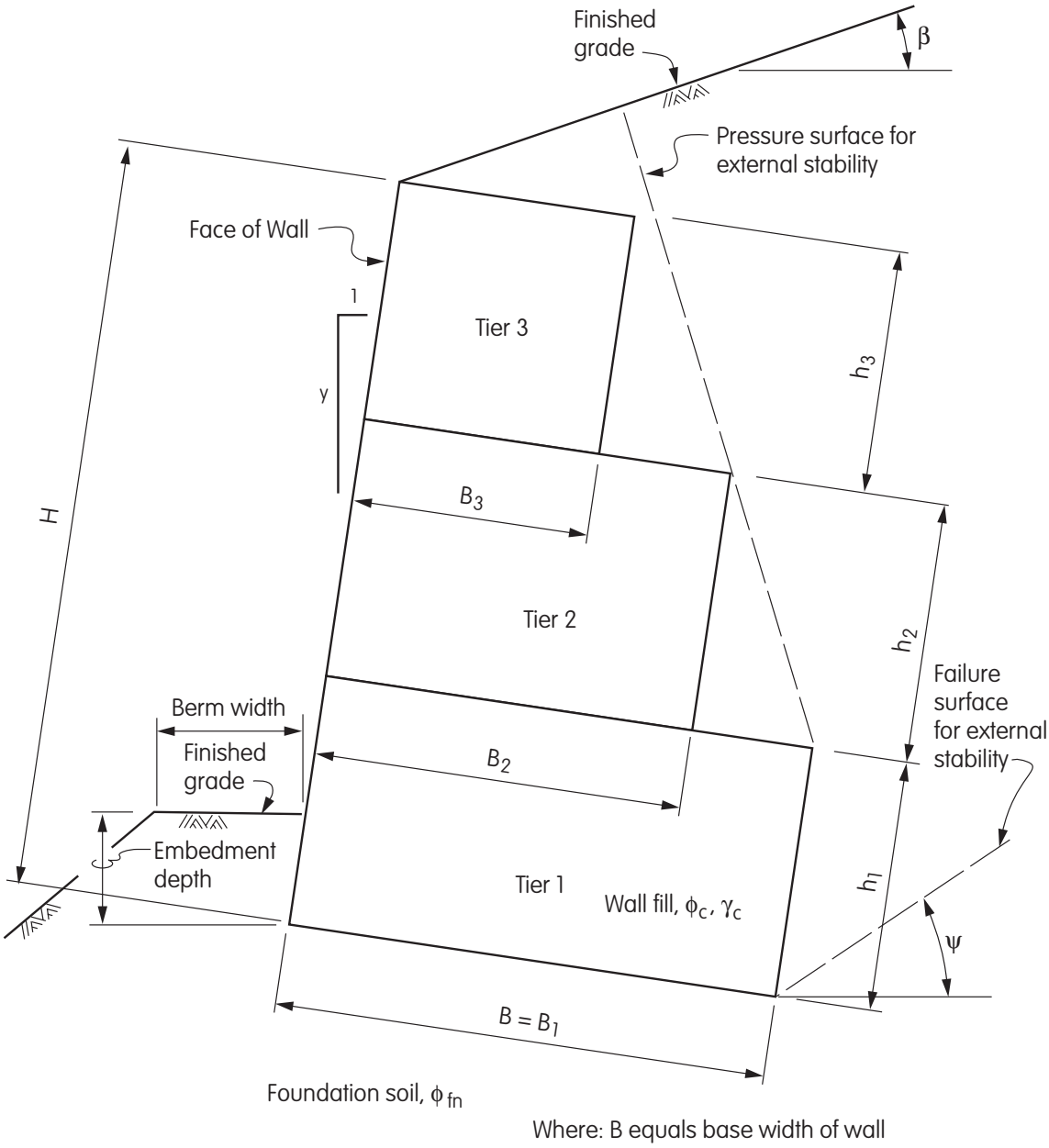


**Figure 5.10.1-1 Prefabricated Modular Wall Dimensions Needed for Design**

modules) the lateral earth pressure shall be determined on a broken surface as shown in figures 5.5.5.5-5 and 5.10.1-1. The friction angle and unit weight of the retained soil shall be used in determining the design lateral earth pressure along with the wall friction angle, $d$ . The following wall friction angles may be used unless more exact values are established:

| Case | Wall Friction Angle, $d$ |
|---|---|
| a) Significant vibrations of backfill or modules settling more than backfill | 0 |
| b) Continuous pressure surface of pre-cast concrete (uniform width modules) | $\frac{1}{2}\phi_f$ |
| c) Averaged pressure surface (backfill filled recesses within or between modules or stepped modules) | $\frac{2}{3}\phi_f$ |

For standardized wall designs for permanent walls, a friction angle of 34 degrees and unit weight of 120 pounds per cubic foot may be assumed for the retained soil, wall fill and foundation soil. Site specific designs shall be used when these values are not appropriate.

In developing the total design lateral pressures acting on the pressure surface, the lateral pressure due to surcharge loads shall be added to the design lateral earth pressure. Refer to Article 5.5.5.10 for the determination of design lateral pressures due to surcharge loads.

When groundwater levels may exist within the wall fill and/or retained soil, they shall be considered in stability determinations.

The resistance due to passive lateral earth pressure in front of a prefabricated modular wall shall be neglected in external stability determinations.

For external stability determinations, traffic surcharge loads shall be considered in accordance with the criteria outlined in Article 5.5.5.10.5. Traffic loads should be positioned to maximize their effects.

### 5.10.2.1 Sliding Stability

The factor of safety against sliding, $FS_{SL}$ , shall be determined by summing the resisting forces of the wall which act parallel to the base of the wall and dividing that sum by the summation of driving forces on the wall which act parallel to the base of the wall. The resisting forces typically consist of the normal force acting on the base of the wall times the coefficient of sliding resistance plus the component of force due to the weight of the wall and any surcharge loads acting on the wall which is parallel to the base of the wall. The normal force acting on the base of the wall consists of the component of force due to the weight of the wall and any surcharge loads acting on the wall which is normal to the base of the wall plus the component of the design lateral pressure acting on the pressure surface which is normal to the base of the wall. The coefficient of sliding resistance used to determine the frictional resistance at the base of the wall shall be as follows:

- For prefabricated modular walls with cells which are filled with wall fill which are in contact with the foundation soil, the coefficient equals, $Tan\, ø$ , at the base of the wall, where $ø$ is the friction angle of the wall fill or the foundation soil whichever is lowest.

- For prefabricated modular walls the base of which consists of a continuous or near continuous surface of concrete, the coefficient equals, $Tan\, 2/3\, ø_{fn}$, where $ø_{fn}$ is the friction angle of the foundation soil.

The summation of the driving forces acting on the wall typically consists of the component of the design lateral pressure acting on the pressure surface which is parallel to the base of the wall.

### 5.10.2.2 Overturning Stability

The factor of safety against overturning, $FS_{OT}$ , shall be determined by summing the resisting moments about the toe of the wall and dividing that sum by the summation of the driving moments about the toe of the wall. The lower front corner of the prefabricated modules is typically assumed as the toe of the wall. The resisting moments are typically provided by the weight of the wall,

surcharge loads acting on the top of the wall and the vertical component of the design lateral pressure acting on the pressure surface. In determining the weight of walls with cellular modules filled with wall fill and essentially open ended at the bottom of the wall, only 80 percent of the weight of the wall fill shall be considered effective in resisting overturning moments. The driving moment is typically provided by the horizontal component of the design lateral pressure acting on the pressure surface.

The eccentricity of the location of the resultant force acting on the base of the wall shall be determined and compared with the maximum allowable eccentricity.

#### 5.10.2.3 Tiered Walls

Stability determinations shall be made at the base of each tier of a tiered wall. The requirements for sliding and overturning stability shall be satisfied under the actual loading conditions and additionally sliding and overturning stability shall be satisfied for every tier above the bottom tier for a loading condition consisting of an unlimited 1.5 horizontal to 1.0 vertical slope the toe of which is located at the front top of the wall.

#### 5.10.2.4 Bearing Capacity

The provisions of Article 4.4.7 apply.

The entire base of the prefabricated modules including the area of any cellular area may be used in determining the contact pressure at the base of the wall. The contact pressure may be assumed to vary linearly.

Allowable bearing capacities for prefabricated modular walls shall be determined using a minimum factor of safety of 3.0 for Group 1 loading applied to the ultimate bearing capacity.

#### 5.10.2.5 Overall Stability

Overall stability analysis shall be performed in accordance with Article 5.2.2.3.

#### 5.10.2.6 Prefabricated Modular Walls with "T" Shaped Modules.

In the determination of external stability for walls with "T" shaped modules, the base width, B, of each tier shall be reduced to account for the cellular structure being open at the back. The reduction in base width, $B$, of each tier shall equal a length equal to 15 percent of the clear distance between the stems of the "T" shaped modules.

A "T" shaped module may consist of a monolithic element which forms both the wall face and the stem which extends into the wall fill, or it may consist of separate elements one of which forms the face and another which forms the stem which extends into the wall fill and which also supports the face element.

### 5.10.3 Internal Stability

Prefabricated modular walls with "T" shaped modules shall be designed for adequate internal stability. For adequate internal stability the pullout resistance provided at each module level shall provide a minimum factor of safety against pullout equal to 1.5 as determined by the following equation:

$$FS_{po} = \frac{R_{po}}{P_a} \qquad (5.10.3\text{-}1)$$

Where, $FS_{po}$, is the factor of safety against pullout of the wall modules above the level under consideration, $R_{po}$, is the pullout resistance of the wall modules above the level under consideration, and, $P_a$, is the design lateral pressure acting on the face of the tributary area of the wall modules above the level under consideration.

The design lateral pressure, $P_a$, shall include the design lateral earth pressure and the lateral pressure due to surcharge loads. When groundwater levels may exist within the wall fill they shall be considered.

The design lateral earth pressure acting on the face of the wall modules shall be determined using Coulomb's theory and the trial wedge method of analysis as described in Article 5.5.5.5 and assuming the wall friction angle, $d$, equals zero.

The pullout resistance, $R_{po}$, consists of the frictional resistance acting on the bottom of the stem of the module at the level under consideration and the frictional resistance acting on the sides of the stems of all the modules above the level under consideration which provide an effective area beyond the failure surface of the failure wedge acting on the face of the wall. The frictional resistance acting on the bottom of the stem equals the normal force times the coefficient of sliding resistance. The normal force equals the weight of stems of all modules above the level under consideration plus any overburden soil on the stems and any permanent surcharge load acting above the stems. The coefficient of sliding resistance depends on the interface conditions, for concrete on foundation soil a value equal to $\tan \phi_{fn}$ may be used, for concrete on concrete a value equal to 0.5 may be used, when joint material between concrete surfaces is used the coefficient to be used shall be established from tests representing actual conditions. The frictional resistance acting on the sides of the stems equals the at-rest lateral earth pressure acting on the effective area of the stems times the coefficient of sliding resistance. For the at-rest lateral earth pressure coefficient, $k_o$, refer to Article 5.5.5.2. The effective area of the stems is that portion of the sides of the stems above the level under consideration which extend beyond the failure surface of the failure wedge associated with the design lateral earth pressure acting on the face of the wall. Only the stems of modules whose full height extends beyond the failure surface shall be considered. The coefficient of sliding resistance depends on the configuration of the sides of the stems of the modules, for smooth concrete a value equal to $\tan (2/3)\, \phi_c$ may be used, for sides with recesses an increased value may be determined. For the percentage of effective area which consists of recesses, up to a maximum of 40 percent, a value equal to $\tan \phi_c$ may be used and for the remaining percentage of effective area a value equal to $\tan (2/3)\phi_c$ may be used. Any shear keys between module elements shall not be considered effective for internal stability determinations.

The requirements for internal stability shall be satisfied under the actual loading conditions at every module, level and additionally for tiered walls internal stability shall be satisfied at every module level above the bottom tier for a loading condition consisting of an unlimited 1.5 horizontal to 1.0 vertical slope the toe of which is located at the front top of the wall.

### 5.10.4 Module Design

Prefabricated modular units shall be designed for the design lateral pressure behind the wall and for the pressures developed inside the cells of modular walls. Also the contact pressure at the bottom of the wall shall be taken into consideration in the design of modular units.

Reinforced concrete modular units and steel modular units shall be designed in conformance with Section 8 and Section 10 respectively using Group I loading and the strength design method provisions. Timber modular units shall be deigned in conformance with Section 13 using Group I loading and working stress design method.

Large unreinforced concrete modular units shall be fabricated with concrete that will provide sufficient strength for handling and crack resistance and that will provide sufficient durability for the service life intended.

Segmental concrete block units shall be fabricated with concrete with a minimum specified compressive strength of 4000 psi. The water absorption limit of segmental concrete block units shall be 5 percent maximum. The units shall also meet the additional requirements of ASTM C90 and C140.

Wire gabion baskets shall be fabricated with wire mesh with adequate strength, flexibility and durability for the site conditions and intended service life.

#### 5.10.4.1 Crib Member Design

Crib members, headers and stretchers, shall be designed as beams supported at their intersections and subjected to the pressure of the wall fill within the cells and the pressure of the retained soil. Refer to figures 5.10.4.1-1 through 5.10.4.1-5 for typical loadings to be considered.

Bearing stresses shall be checked between bottom headers and stretchers due to loading from the tributary area of base pressure.

Bearing stresses shall be checked between headers and stretchers at intermediate levels due to loading from the vertical frictional forces and deadloads acting on the headers and stretchers.

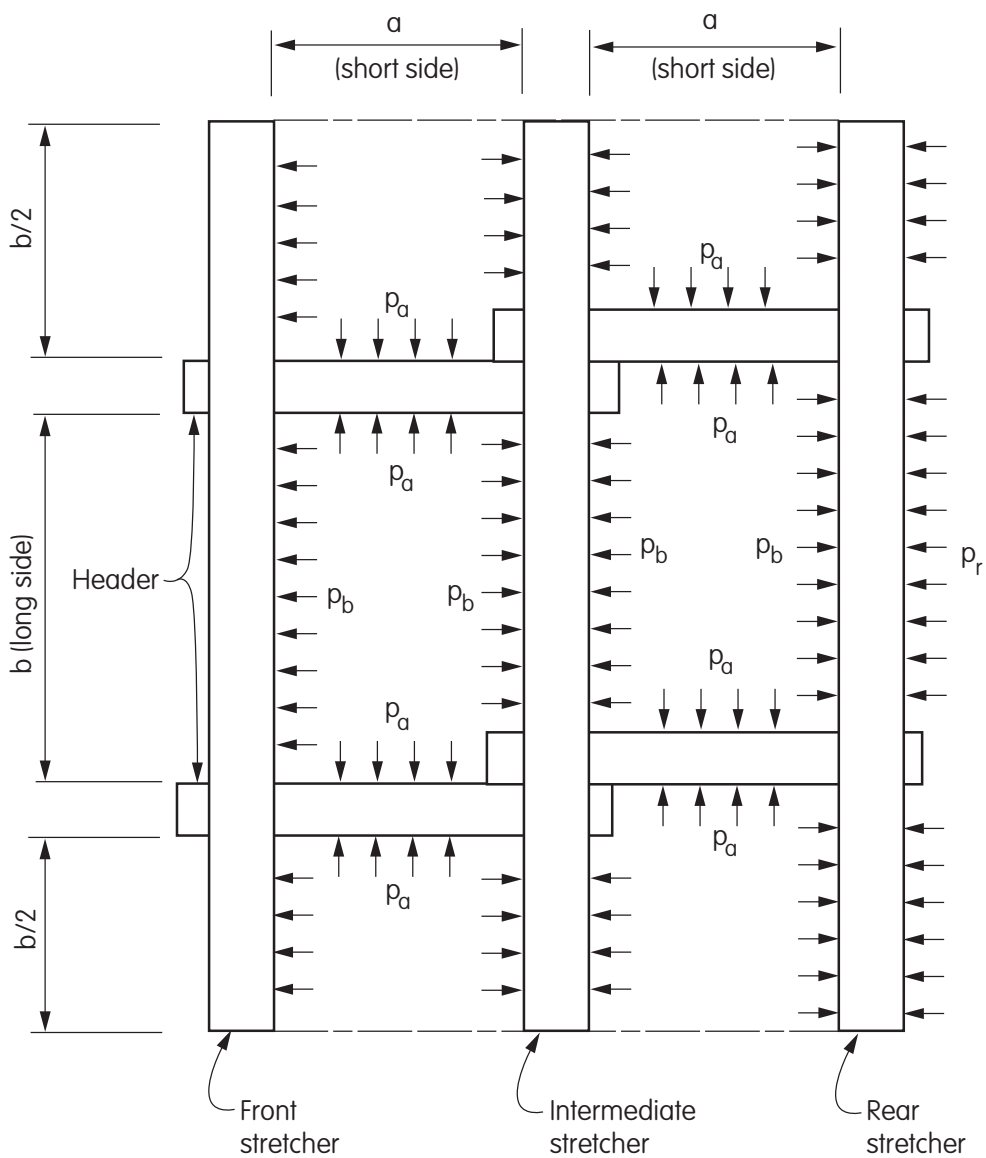


Where:

$a$ =the length of the sides of a square cell or the length of the short side of a rectangular cell (FT)

$b$ =the length of the long side of a rectangular cell (FT)

$R$ =hydraulic radius
For square cells, $R = \frac{a}{4}$
For rectangular cells,

$R_a$ $= \frac{a}{4}$ for determining pressures next to short side of cell.

**Figure 5.10.4.1-1 Plan View of Crib Members Showing Design Lateral Pressures ( Continued )**

$R_b$ = $\frac{a'}{4}$ for determining pressures next to long side of cell and $a' = \frac{2ab}{(a+b)}$

$y$ = depth below top of cell fill at which pressures are being determined (FT)

$q$ = vertical pressure in cell fill at depth $y$ (KSF) for square cells and next to short side of rectangular cells,

$$q_a = \frac{\gamma R_a}{\mu' k}\left[1 - e^{-\mu' k y / R_a}\right]$$

next to the long side of rectangular cells,

$$q_b = \frac{\gamma R_b}{\mu' k}\left[1 - e^{-\mu' k y / R_b}\right]$$

$m'$ = tangent of angle of internal friction of wall fill = $tan ø_c$ (DIM)

$k$ =ratio of lateral to vertical pressure in cell fill (DIM)
= $k_o = 1 - sin ø_c$

$g$ = unit weight of wall fill = $g_c$ (KCF)

$e$ = base of natural logarithms, 2.71828

$p$ = lateral pressure in wall fill at depth $y$
= $qk$ (KSF)

for square cells and next to the short side of rectangular cells,

$p_a = q_a k$
next to the long side of rectangular cells

$p_b = q_b k$

$V$ =total vertical frictional force per unit width of cell perimeter over depth $y$ (KIPS/FT)
= $(g\ y - 0.8q)\ R$

for square cells and at the short side of rectangular cells,

$V_a = (g\,y - 0.8q_a)\,R_a$
at the long side of rectangular cells,

$V_b = (g\,y - 0.8q_b)\,R_b$

$W_c$ = total weight of wall fill in cell over depth, $y$
= $g_c aby$ (KIPS)

$DW_c$ = weight of wall fill in cell over depth, $y$, not supported by vertical frictional force at cell perimeter over depth, $y$ (KIPS)
= $W_c - 2V_a a - 2V_b b$

$ø_c$ = angle of internal friction of wall fill (DEG)

$P_r$ = design lateral pressure from retained fill (KSF)

**Figure 5.10.4.1-1 Plan View of Crib Members Showing Design Lateral Pressures ( Continued )**

The column sections of steel crib walls shall be checked at the base considering the loading from the tributary area of base pressure.

The column sections of steel crib walls shall be checked at intermediate levels due to loading of the vertical frictional forces and deadloads acting on the headers (spacers) and stretchers (stringers).

The bottom three courses of both headers and stretchers of reinforced concrete crib walls shall be designed for plastic hinging at both column faces and at the midspan of the members due to a uniformly distributed vertical loading (see figure 5.10.4.1-6). The member sections shall be designed for the vertical shear force, $V_p$, associated with the plastic hinge moment, $M_p$. where ;

1. $M_p = 1.3M_n$
2. $øV_n \geq V_p$
3. Column is defined as the region where headers and stretchers intersect.
4. $M_n$ is based on member section required to resist wall fill pressures.

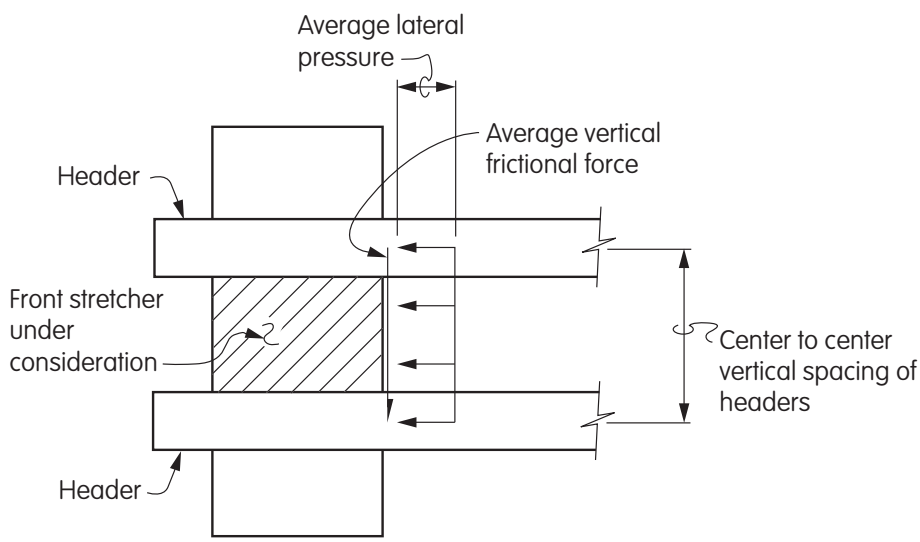


Notes:

1. The average lateral pressure equals $p_a$ or $p_b$ depending on the cell dimensions.
2. The loading is based on the depth, y, to the mid-height of the stretcher under consideration.
3. The design forces on the front stretcher shall not be less than the active earth pressure associated with the active failure wedge controlled by the clear opening at the top of the front crib cell.
4. The deadload of the member and the weight of wall fill on top of the member shall be considered.

**Figure 5.10.4.1-2 Design Forces on Front Stretchers**

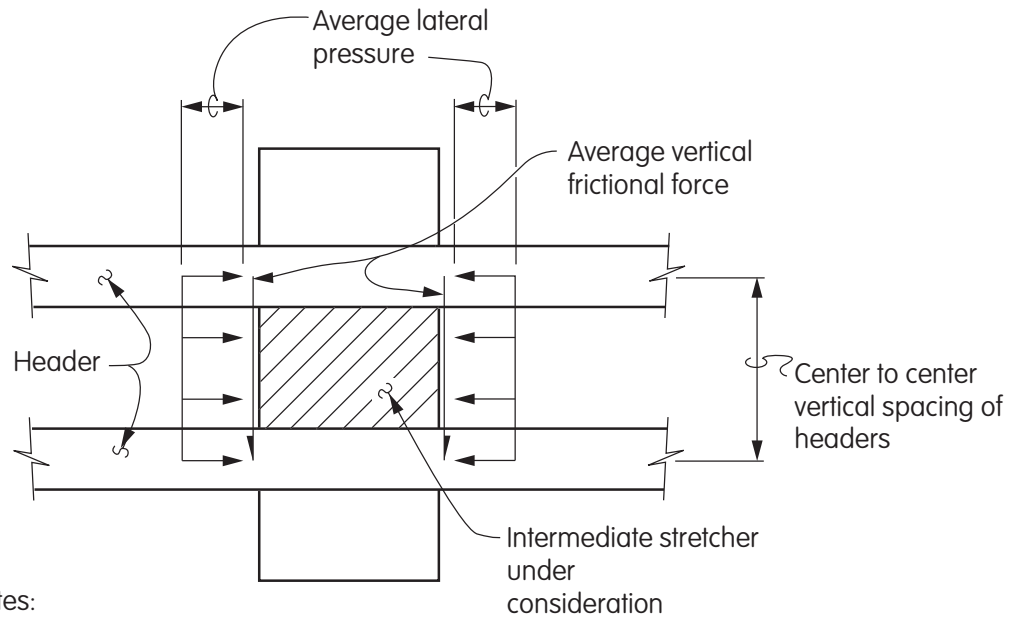


Notes:

1. The average lateral pressure equals $p_a$ or $p_b$ depending on the cell dimensions.
2. The loading is based on the depth, y, to the mid-height of the stretcher under consideration.
3. The deadload of the member and the weight of wall fill on top of the member shall be considered.

**Figure 5.10.4.1-3 Design Forces on Intermediate Stretchers**

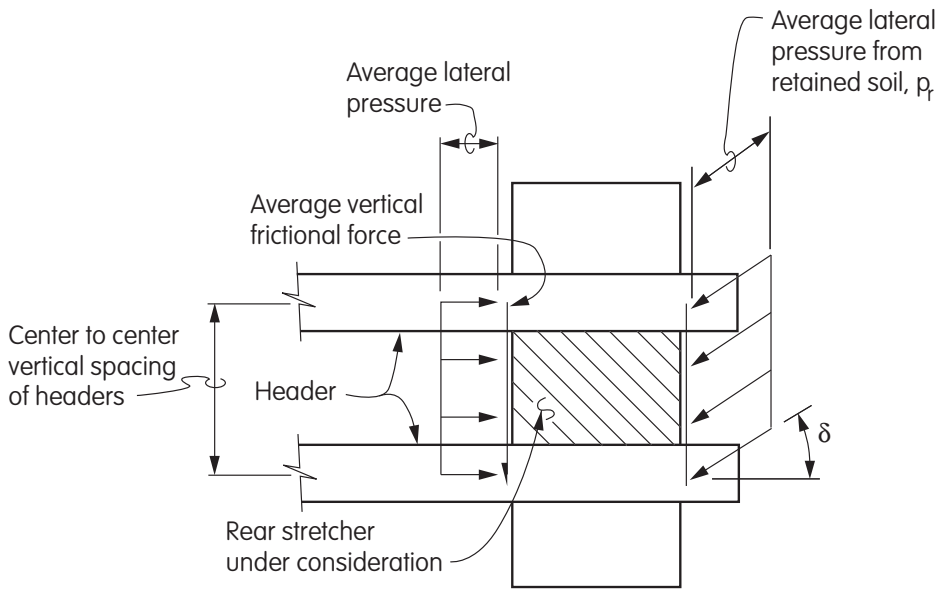


Notes:

1. The average lateral pressure equals $p_a$ or $p_b$ depending on the cell dimensions.
2. The loading is based on the depth, y, to the mid-height of the stretcher under consideration.
3. The deadload of the member and the weight of wall fill on top of the member shall be considered.

**Figure 5.10.4.1-4 Design Forces on Rear Stretchers**

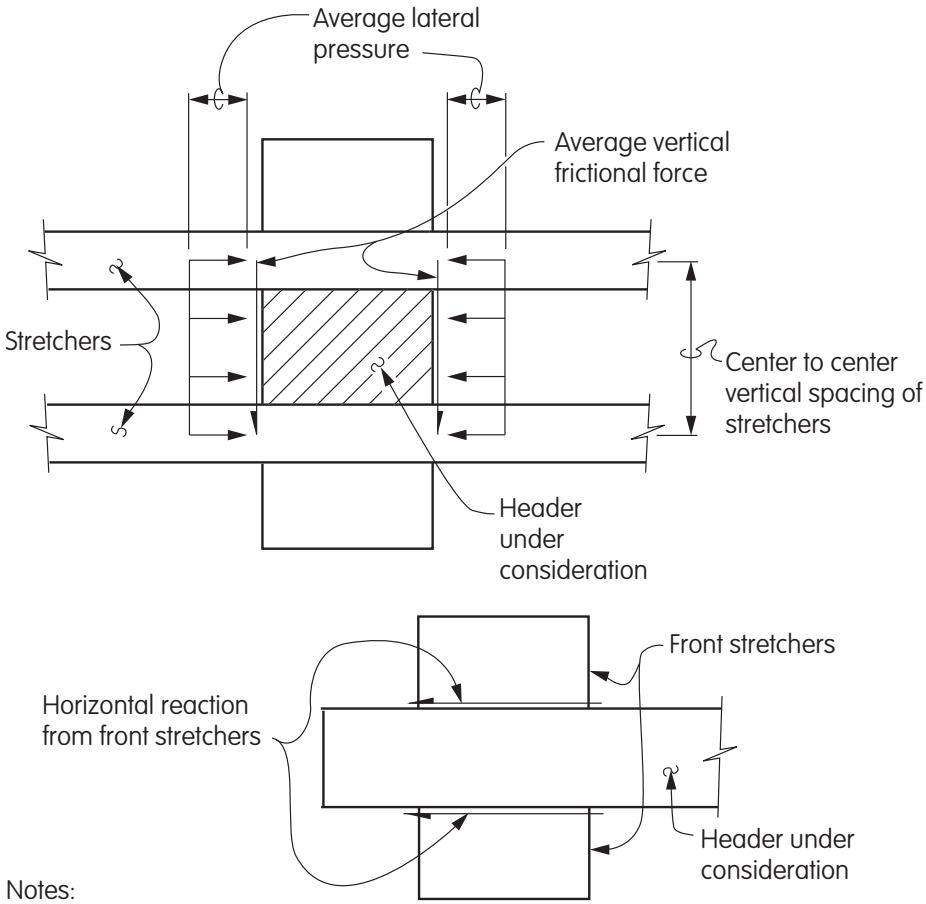


Notes:

1. The average lateral pressure equals $p_a$ or $p_b$ depending on the cell dimensions.
2. The loading is based on the depth, y, to the mid-height of the header under consideration.
3. The deadload of the member and the weight of wall fill on top of the member shall be considered.

**Figure 5.10.4.1-5 Design Forces on Headers**

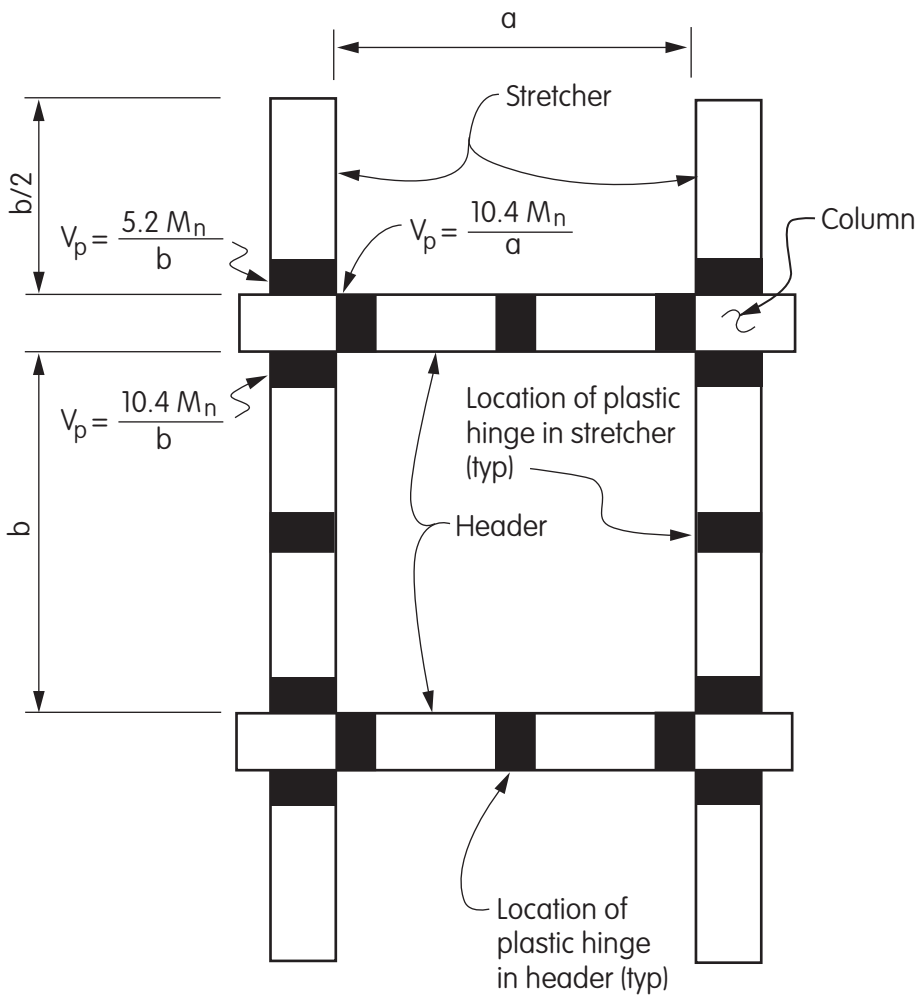


**Figure 5.10.4.1-6 Location of Plastic Hinges in Members at Base of Crib Wall**